CHEMICAL TEST TRAINING SCHOOL FOR INTOXILYZER 5000

Student Manual

Fall 2005 and Spring 2006 Training Sessions

Prepared By:

Office of Attorney General
Crime Laboratory Division
Toxicology Section
2635 East Main Avenue (58501)
P.O. Box 937
Bismarck, ND 58502-0937

Telephone (701) 328-6159 or (800) 296-2054
Fax (701) 328-6185

TABLE OF CONTENTS

Page Number

FOREWORD

Welcome i
Criteria for Successful Completion of This Course ii

THE HISTORY OF CHEMICAL TESTING

The Grand Rapids Study 1
Chart 1: The Grand Rapids Study 1
National and Statewide Highway Safety Statistics 2
Motor Vehicle Crash Date - 2001 2
Table 1: Persons Killed and Fatality Rate by Population 2
Table 2: Traffic Fatalities by State 3
Table 3: Drivers in Fatal Crashes, Blood Alcohol Concentration & Status 3
North Dakota Statistics 4
Table 4: ND Blood and Breath Alcohol Tests 4
Table 5: Blood and Breath Tests by Age 5
Table 6: ND Blood and Breath Tests by Alcohol Level 6
A Historical Perspective to Alcohol and Highway Safety 7

INTOXILYZER 5000

General Information 10
Figure 1: Intoxilyzer 5000 10
Theory of Infrared Analysis 11
Instrument Design and Function 12
Figure 2: Schematic Diagram of the Intoxilyzer 5000 14
Satisfying the Breath Sample Requirements 15
Preliminary Setup of the Instrument 15
Supplies at Each Location 16
Parts, Controls, and Indicators 17
Figure 3: Front View/Back View 17
Keyboard Selection 19
Legend 19
Changing the Time, Date, or Location Code 19
Computer Modem 19
Visual Displays 20
Audible Tones 20
Display Messages and Commands 20
Sleep Mode 21
Display Message 21
Operating Procedures 23
North Dakota Custom Mode Sequence 23

Intoxilyzer 5000 KB Custom Mode Sequence 24
Test Record Form 106-KB (Sample A) 30
Intoxilyzer 5000 KB-EP Custom Mode Sequence 31
Display Message 31
Test Record Form 106-KB-EP (Sample B) 37
Consistency in Breath Samples for Evidentiary Tests 38
Malfunctions and Displayed Error Messages 38
Diagnostic Errors 38
Display Error Message 38
Corrective Action for any Error 39
Other Error Messages 40
Displayed Error Messages 40
Evidence Card Jammed in Intoxilyzer 5000 KB
With Internal Printer 42
General Malfunctions 42
Test Records Reporting Errors 43
KB Test Record Pointing Out Places to Look
for Errors (Sample C) 44
Detection of Residual Mouth Alcohol 45
Other Mode Options Available to All Operators 45
Legend 45
Procedural Steps of the ABA Test Intoxilyzer 5000 KB 46
Display Message 46
Test Record Form 106-KB-ABA Mode (Sample D) 50
Test Record Form 106-KB-EP (Sample E) 51
Test Record Form 106-KB (Sample F) 52
Test Record Form 106-KB-EP (Sample G) 53
Test Record Form 106-KB-EP (Sample H) 54
Test Record Form 106-KB-EP (Sample I) 55
Quality Assurance in Breath Testing 56
Chemical Test Operators 56
Field Inspectors 56
Toxicology Section Staff 57

APPROVED METHOD INTOXILYZER 5000

Approved Method to Conduct Breath Test with the Intoxilyzer
5000 KB 58
Approved Method to Conduct Breath Test with the Intoxilyzer
5000 KB-EP 63

SCREENING DEVICE/INTOXILYZER S-D2

Instrument Features 67
Intoxilyzer S-D2 68
Figure 1: Instrument Features 68
Description of Analysis 69
Figure 2: Sampling System 69

Explanation of the Fuel Cell Chemistry 70
Figure 3: Rate of Electron Build-up 70
Operating Procedure 71
Interpretation of Results 71
Diabetic Reaction (Acetone) 71
Mouth Alcohol 72
Calibration of the S-D2 72
Figure 4: Model Mark 11A Simulator 73
Calibration 74
Maintenance 74
Battery 75
Mouthpieces 75
Temperature 75
Summary 76
Purpose 76
Certification 76
Intoxilyzer S-D2 76
Calibration 76
Form 105 Completed at Location with Screening Devices Only 77
Standard Ethyl Alcohol Solution Report Form 77

APPROVED METHOD SCREENING DEVICE/S-D2

Approved Method to Conduct Breath Test with the Intoxilyzer S-D2 78

THE METRIC SYSTEM

History of the Metric System 80
Understanding the Metric System 80
Relationship of Measures in the Metric System 80
Figure 1: Relationship of Length, Volume, and Mass (Weight) 80
Units of Measure 81
Table 1: The Meter 82
Table 2: The Liter 82
Table 3: The Gram 82
Measure of Length 83
Figure 2: Comparison of Length 83
Measure of Volume 84
Figure 3: Comparison of Volume 84
Measure of Mass (Weight) 85
Figure 4: Comparison of Mass (Weight) 85
Temperature 86
Figure 5: Standard Solution Temperature 86
Density 87
Specific Gravity 87
Percent 87

Proof 87
Alcohol Concentration 87
Figure 6: Alcohol Concentration 87
Common Conversions 88
Figure 7: Common Conversions 88

THE SIMULATOR AND STANDARD SOLUTION

Figure 1: Guth Model 34C Simulator 89
Figure 2: Guth Simulator Model 34C with Heated Hose Attached 90
Figure 3: Guth Model 2100 Simulator with Digital Display 91
Changing Simulator Solution on the Intoxilyzer 5000 KB or KB-EP 92
Items Needed 92
Procedure 92
Trouble Shooting the Simulator 94
Table 1: Trouble Shooting 94
Simulator Thermometer in a Guth Simulator Model 34C 95
Figure 4: Proper Temperature 95
Intoxilyzer Record Form 120-I 96
Standard Solution Analytical Report 97
Label for Standard Ethyl Alcohol Solution 99
Filling Out Log Book Form 120-I 99
ACA Test Record Form 106-KB-EP 100
ACA-Form 105 101
Attention-New Policy 102
Simulator Solutions 102

PHARMACOLOGY AND TOXICOLOGY OF ALCOHOL

Introduction 103
Definition and Chemistry of Alcohol 103
Non-Distilled Beverages 104
Distilled Beverages 104
Endogenous Alcohol 104
Common Alcohols 105
Table 1: Common Alcohols 105
Absorption of Alcohol 106
Alcohol in the Human Body 107
Chart 1: Alcohol in the Human Body 107
The Rate of Absorption of Alcohol 108
Three Phases of Alcohol Absorption 109
Figure 1: Generalized Alcohol Concentration Curve 109
Distribution of Alcohol in the Body 110
Alcohol Pathway 111
Figure 2: A Representation of Ethyl Alcohol Distribution Pathways 111

Widmark's Factor "R" 112
Elimination of Alcohol 112
Expiration of Alcohol 112
Excretion of Alcohol 112
Metabolism of Alcohol 113
The Effects of Alcohol on the Central Nervous System 114
The Central Nervous System 114
The Brain's Four Primary Areas 114
Frontal Lobe 115
Temporal Lobe 115
Parietal Lobe 115
Lower Brain 115
Performance of Driving-Related Tasks Decreases at BAC's Above Zero 116
Low Doses (<0.05 g/dl) 116
Moderate Doses (BAC 0.05-0.08 g/dl) 116
Higher Doses (BAC > 0.12 g/dl) 118
Pharmacological Effects of Alcohol 119
Chart 2: Pharmacological Effects of Alcohol 119
Stages of Acute Alcoholic Influence/Impairment 120
Table 2: Stages of Acute Alcoholic Influence/Impairments 120
Mellanby Effect 121
Sobering up the Intoxicated Person 121
Blackouts 121
Care Given to the Inebriated Prisoner 122

BLOOD, URINE, AND POST MORTEM KITS

Kit Boxes/Identifying Labels 123
Procedure for Collection and Submission of Blood Specimens for Alcohol and Drug Analysis 124
Care and Handling of Blood Specimens 124
Memo to Emergency Room 125
List of Approved Designations 127
Collection of Blood Samples 129
Completion of the Toxicology Form 104 129
Sealing the Mailing Box 130
Figure 1: Seals 130
Submission for Blood (104) 131

Procedure for Collection and Submission of Urine Specimens for Alcohol and Drug Analysis 134
Care and Handling of Urine Specimens 134
Collection of the Urine Specimen 134
Completion of the Submission for Urine Form (104U) 135
Sealing the Mailing Box 135
Figure 2: Seals 135

Storage and Delivery of Specimen 136
Submission of Urine Form (104-U) 137
Fatal Accident Reporting System 140
Post Mortem Kit Instruction Form 141
Post Mortem Kit Seals 143
Figure 3: Seals 143
Coroner Request for Toxicology Analysis Letter of Certification 144
Toxicology Traffic Fatality Study 147

LEGAL DECISIONS (ATTORNEY GENERAL HANDOUT)

TIPS ON TESTIFYING/CASE PREPARATION

General Rules for In-Court Demeanor 150
General Rules for Testifying 150
Pointers for Cross-Examination 152
North Dakota DUI Law Flow Chart 156
Chart 1: North Dakota DUI Law 156
North Dakota DUI Court Process Law Flow Chart 157
Chart 2: North Dakota DUI Court Process Law 157
North Dakota DUI Graduated drivers License Flow Chart 158
Chart 3: North Dakota DUI Graduated Drivers License 158
Request for Subpoena and/or Hearing Notice 159
Directions 159
Case Identification 159
Request Made By 159
Reason for Request 159
Report and Notice Under Chapter 39-20 or 39-06.2
NDCC Form 160
List of Chemical Test Records 162
List of Approved Chemical Testing Devices 163
List of Certified Chemical Test Operators 167

NORTH DAKOTA CENTURY CODE

Title 5: Alcoholic Beverages 170
Game and Fish Department 172
Intoxication Testing of Boat Operators 173
Intoxication Testing of Hunters 181
Title 39: Motor Vehicles 190
Chemical Test for Intoxication, Implied Consent 201
Regulation and Registration of Snowmobiles 215
DUI Penalties 220

LABORATORY

North Dakota Custom Mode Sequence (CMS) 222
Check Calibration (ACA Mode) 222
Tests Only Requiring One Breath Test (ABA Mode) 222

Definitions 223
Instructions for Lab Tests.....223
Location Code Listing 224
County Codes Listing.....225
Composition Notebook (Completed Example) 226
Individual Tests.....227

FOREWORD

WELCOME

Peace Officers of North Dakota:

The material contained within this manual has been developed primarily for use in the breath testing operator initial certification classes. It is presented to aid the law enforcement officer when dealing with the impaired driver. Information and exercises in this manual are meant to help the officer know how to take a DUI case from the chemical test into the hearing and/or court trial.

The material in this manual is a compilation of information gathered over the past four decades. Without the dedication of the many scientists who have contributed to this field, the North Dakota Chemical Test Program would not have advanced this far. Many scientists working in our toxicology section have also contributed to writing and editing this manual. In addition to those named in this manual, we wish to acknowledge former North Dakota State Toxicologists: Richard Prouty, N.G.S. Rao, and Aaron Rash.

Special Thanks Also to the Following:

George Browne, Texas Department of Public Safety, who graciously gave us permission to reprint information from their manual, Texas Breath Alcohol Testing Program Operator Manual, TLE/br-38 (Rev. 7/94).

Robert B. Forney, Jr., PhD, Medical College of Ohio; Toledo, Ohio; who allowed us to reprint portions of his presentation, The Effect of Alcohol on Sensory Functions, presented at the International Association for Chemical Testing; Missoula, MT; 1997.

Margy Pearson
State Toxicologist

CRITERIA FOR SUCCESSFUL COMPLETION OF THIS COURSE

The primary purpose of this course is to successfully train each of you to become Intoxilyzer 5000 and screening device chemical test operators. Part of the training includes adequate preparation for the administrative hearing and courtroom process. The staff is willing to help you as needed. Following are class requirements:

1. **Attendance at all classes** is required.

2. Each student must complete **thirty (30) tests** on the Intoxilyzer 5000.

3. A score of **75 percent correct on Quiz 1 and Quiz 2** will be considered passing. Failure to achieve this score will result in individual training with an instructor.

4. **Calibration of the S-D2 screening device** will be required. Failure to accomplish this will require individual training with an instructor.

5. A score of **75 percent correct on the Final Exam** is required. Failure to achieve this will require the student to return for additional classroom training and a score of **75 percent correct on a second exam**.

6. You will be required to take **five (5) error free tests on the Intoxilyzer 5000**. One test will be an ACA test. The other four tests will be done on unknown solutions. Failure to achieve this will result in review of the Approved Method to Conduct a Breath Test on the Intoxilyzer 5000 and repeating the above tests, **error free**.

If you have any conflicts with scheduling or are in need of any individual training, please contact the lead instructor. We will try to accommodate you.

THE HISTORY OF CHEMICAL TESTING

THE GRAND RAPIDS STUDY

This study was conducted in the Grand Rapids, Michigan, community between July 1, 1962, and June 30, 1963. Two groups of drivers were studied. One group contained 8,008 drivers selected at random. The other group contained 9,353 drivers who were involved in accidents.

The two groups were compared with each other with regard to: Blood Alcohol Level[1], age, estimated annual miles driven, completed years of education, race or nationality, marital status, occupation, reported average drinking frequency, and sex. The most highly educated, those with the best employment, and middle-aged have a lower accident-involvement rate compared to the young, the very old, the inexperienced, and the uneducated.

Individuals with a 0.15 percent alcohol concentration were 25 times as likely as a sober driver to cause an accident, while those with a concentration of 0.08 percent were four times as likely.

The critical figure of 0.08 percent alcohol concentration, for impairment while driving, was taken from this study. Analysis of the data showed that at levels greater than 0.08 percent blood alcohol concentration, variables other than alcohol became less and less significant and eventually disappeared. The relative probability of causing an accident went up dramatically with the increase in alcohol concentration.

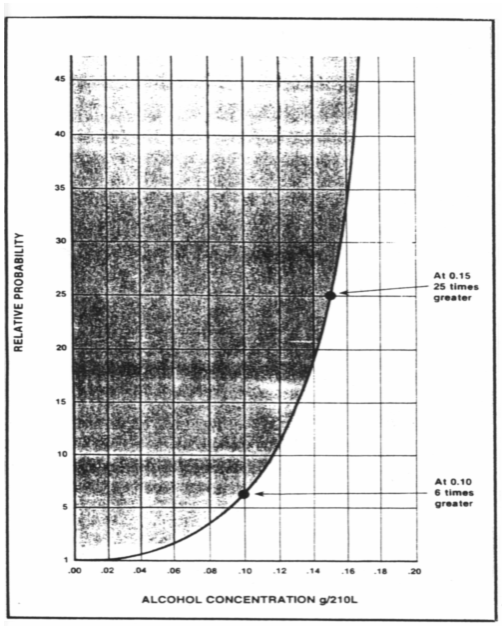

Chart 1

This was the first breath alcohol study linking motor vehicle accidents to the use of alcohol. This study was the first of many to come involving breath alcohol measurement. It showed there was a statistical correlation between the probabilities of causing a motor vehicle accident and the blood alcohol concentration of the driver. No longer could individuals argue that other factors caused traffic mishaps. Chart 1 to the right reflects the results of the study.

Breath alcohol concentrations remain the standard for correlating the effects of alcohol to driving skills and horizontal gaze nystagmus.

---

[1]Throughout this manual "alcohol" refers to ethyl alcohol or ethanol unless specified.
Ref: Borkenstein, R.F.; The Role of Alcohol in Traffic Accidents, The Grand Rapids Study, Blutalkohol, Vol. 1 (Supplement 1); Hamburg, 1974.

NATIONAL AND STATEWIDE HIGHWAY SAFETY STATISTICS

Motor Vehicle Crash Data – 2001:

Following the Grand Rapids Study, the nation took a serious look at the need to report alcohol-related incidents. The National Highway Traffic Administration (NHTSA) compiles these data. Statistics from motor vehicle accidents detailing property damage, injury, and loss of life are compiled.

Information from the Fatal Accident Reporting System (FARS) and the National Accident Sampling System/General Estimates System (GES) are compiled annually by NHTSA.

The fatality rate per capita has decreased with increased social awareness, stiffer penalties and fines, and safer vehicles and highways. The fatality rate has fallen from 26.02 to 14.79 per 100,000 from 1966 to 2001. Still, tens of thousands of individuals die each year in motor vehicle accidents. This is illustrated in the following table:

PERSONS KILLED AND FATALITY RATE BY POPULATION, 1966-2000			
Year	**Fatalities**	**Resident Population (Thousands)**	**Fatality Rate Per 100,000 Population**
1966	50,894	195,576	26.02
1990	44,599	249,399	17.88
1995	41,798	262,765	15.91
2001	42,116	284,797	14.79

Table 1

North Dakota remained low in numbers of fatalities compared to other states over the past year. The following table shows the area fatalities:

TRAFFIC FATALITIES BY STATE 1993[1] - 2001									
STATE	**1993**	**1994**	**1995**	**1996**	**1997**	**1998**	**1999**	**2000**	**2001**
ND	89	88	74	85	105	92	119	86	105
MN	538	644	597	576	600	650	625		568
SD	140	154	158	175	148	165	150		171
MT	195	202	215	200	265	237	220		230
USA	40,150	40,676	41,798	42,065	42,013	41,501	41,717	41,945	42,116

Table 2

[1]Traffic Safety Facts 1995: A compilation of motor vehicle crash data from the FARS and GES system.

North Dakota drivers involved in fatal crashes, surpassed the national average for percent of drivers surviving, killed, or overall with an alcohol concentration higher than 0.10. Fewer ND drivers were sober. A higher percentage of ND drivers had a detectable level of alcohol in their system. See the following table:

DRIVERS IN FATAL CRASHES, BLOOD ALCOHOL CONCENTRATION & STATUS[1]				
	North Dakota			
	BAC			
STATUS	**0.00**	**0.01-0.09**	**0.10+**	**TOTAL**
Surviving Drivers (USA - Nationwide)	78.0 (84.1)	9.5 (5.5)	12.8 (10.4)	47 (31,757)
Killed Drivers (USA)	49.0 (62.1)	10.0 (7.0)	41.0 (30.9)	50 (24,398)
All Drivers (USA)	63.1 (74.5)	9.7 (6.1)	27.2 (19.3)	97 (56,155)

Table 3

[1]Traffic Safety Facts 1995: A compilation of motor vehicle crash data from the FARS and GES system.

In order to combat the problem of impaired drivers, North Dakota has kept current with driving laws dealing with driving while under the influence of alcohol and other drugs. During the legislative session, laws were enacted to lower the legal BAC limit for youthful offenders.

North Dakota Statistics:

The Office of Attorney General's Toxicology Section has gathered the data of blood and breath alcohol statistics since 1982. The number of breath tests relative to blood tests declined in the early 1980's. Possible reasons are the advent of the administration process requiring a civil and criminal hearing and the introduction of the Intoxilyzer as a newly approved breath-testing device. The total number of tests reported was down significantly from 1982 to 2000. Following are the statistics available:

ND BLOOD AND BREATH ALCOHOL TESTS, 1982-2000			
Year	**Blood**	**Breath***	**Total**
1982	1,766	6,481	8,247
1985	1,651	4,032	5,683
1990	2,279	2,410	4,689
1995	1,799	3,529	5,328
2000	2,114	2,279	4,393

Table 4

*The North Dakota breath tests were performed on a Breathalyzer (prior to 1985), a Breathalyzer or Intoxilyzer (1985 to 1990), and an Intoxilyzer (1990).

Alcohol data on BAC tests by age reflect the 25-34 age group as the highest incidence of tests most often leading to a charge of DUI. Though the number of tests for the 14-20 age group appears to have declined, the youthful offender continues to be a problem in North Dakota because of illegal drinking.

BLOOD AND BREATH TESTS BY AGE, 2000				
Age Group	**Blood**		**Intoxilyzer**	
	Number	**Avg. % AC**	**Number**	**Avg. AC**
13 Years + Under	----	0.000	2	0.130
14-17	60	0.110	58	0.107
18-20	247	0.146	289	0.125
21-24	459	0.172	431	0.154
25-34	517	0.182	617	0.193
35-44	441	0.193	492	0.173
45-54	233	0.196	266	0.160
55-64	96	0.212	82	0.137
65-74	38	0.189	21	0.192
75 & older	9	0.170	20	0.107
Not stated	14	0.162	5	0.117

Table 5

In 2000, approximately 92.2 percent of those tested for alcohol concentrations registered a BAC over 0.10 percent by weight. Law enforcement agencies are pre-screening individuals quite accurately. Impaired drivers were most frequently apprehended while driving with an alcohol concentration of 0.15 - 0.19. The average blood alcohol concentration was 0.16 percent by weight while the average breath alcohol concentration was 0.18.

ND BLOOD AND BREATH TESTS BY ALCOHOL LEVEL, 2000				
ALCOHOL CONCENTRATION	**BLOOD**		**INTOXILYZER**	
	NUMBER	**PERCENT**	**NUMBER**	**PERCENT**
0.00 - 0.04	50	2.4%	72	3.2%
0.05 - 0.09	86	4.1%	137	6.0%
0.10 - 0.14	483	23.0%	738	32.4%
0.15 - 0.19	702	33.4%	848	37.2%
0.20 - 0.24	502	23.9%	354	15.5%
0.25 - 0.29	194	9.2%	89	3.9%
0.30 - 0.34	63	3.0%	36	0.02%
0.35 - 0.39	17	0.8%	2	0.1%
0.40+	3	0.1%	3	0.1%
TOTAL	2,100		2,279*	
AVG. AC	0.18		0.16	

Table 6

***** The total number of Intoxilyzer samples taken was 2,284; however, 3 cases were either insufficient or invalid and the number refused was not reported.

Much work remains in the area of law enforcement to counter individuals driving under the influence of alcohol. The following course material is presented to assist you in your law enforcement efforts.

A HISTORICAL PERSPECTIVE TO ALCOHOL AND HIGHWAY SAFETY

Developments in technology have increased the magnitudes of problems caused by the social use of alcohol. Two thousand years of use of alcohol have been documented. With the advent of the horseless carriage, the abuse of alcohol spilled over to problems of highway safety.

The following is a condensed list of events, which have marked the development of highway safety with relation to alcohol:

1803 **W. Henry**. (Henry's law) $p=k_t$ concentration: whence $concentration_{liquid}/concentration_{gas}$ $-k_t$ for volatile substance.

1899 **American Railroad Association.** Rule G, prohibiting drinking by railway crewmembers while on duty.

1922 **E.M.P. Widmark.** Described a micro-method for blood alcohol determination based on a diffusion principle weighing the sample in a blood capillary.

1927 **E. Bogen.** Described the first use of breath alcohol analysis for medicolegal purposes using an expired air/urine alcohol ratio of 1:2000.

1931 **R.N. Harger**. Proposed practical breath alcohol analysis based on measurement of ethanol/CO_2 ratio as a measure of alveolar air EtOH concentration.

1934 **H.A. Heise.** Described a simple distillation-oxidation-visual color comparison method for body fluid alcohol determination.

1938 **National Safety Council (NSC).** Committee on Tests for Intoxication. Recommended blood alcohol level as an index of intoxication, proposing 0.15 percent w/v blood alcohol in borderline limit for motor vehicle operation.

1938 **R.N. Harger.** Described first practical portable breath alcohol apparatus Drunkometer, employing a 1:2000 alveolar air/blood alcohol ratio and using N/20 $KMnO_4$ in 16 N H_2SO_4 as an alcohol reagent.

1939 **H.A. Heise, et al**. A.M.A. Committee to Study Problems of Motor Vehicle Accidents, recommended the 3-zone interpretation of blood alcohol levels (0-0.05%; 0.05-0.15%; 0.15-% W/W).

1941 **L.A. Greenberg, F.W. Keator. ALCOHOLOMETER.** Based on expired air/arterial blood EtOH ratio of 1:1300 and using and I_2O_5 reagent.

1941 **W.W. Jetter, M. Moore, and G.C. Forrester.** Intoximeter. EtOH and CO_2 collection using alveolar air/blood ratio of 1:2000.

1950 **K. Bjerver and L. Goldberg.** "Effect of alcohol ingestion on driver ability" - blood alcohol level of 0.035-0.04% to be impairment threshold.

1951 **A.J. Carlson, et al.** Reported constancy of alveolar air/blood EtOH ratio and cited its value as "approximately 1:2100".

1953 **New York State.** First U.S. implied consent alcohol test statute enacted.

1953 **K. Grosskopf.** Developed practical portable breath alcohol Alco-Test for semi-quantitative breath EtOH screening test using dichromate reaction tubes.

1954 **R.F. Borkenstein**. Developed practical portable breath alcohol apparatus, Breathalyzer, using an acid dichromate reagent system and an alveolar air/blood alcohol ratio 1:2100.

1954 **R.F. Borkenstein**. Developed prototype for Simulator following training in the cold in Fargo, ND.

1958 **Symposium on Alcohol and Road Traffic**, **Indiana University.** A BAC of 0.05 percent will definitely impair the driving ability of some individuals, increasing proportionally until a BAC of 0.10 percent all individuals are definitely impaired.

1964 **R.F. Borkenstein, et al.** Grand Rapids, Michigan Study. At a BAC of 0.08 percent, other factors diminish and alcohol is the prime cause of motor vehicle accidents (Breathalyzer data).

1969 **Canadian Bar Association and Canadian Medical Association**. Updated 1921 legislation: illegal to drive at 0.08 percent blood alcohol concentration. Resulted in 6.3 percent decrease in fatalities between 1969 and 1970.

National Highway Traffic Safety Administration (NHTSA). Standard 8: “Alcohol in Relation to Highway Safety." Sanction on highway funds for failure: (1) state authority, (2) implied consent law, and (3) BAC no higher than 0.10 percent.

1971 **NSC**. Committee on Alcohol and Other Drugs. Position that 0.08 percent w/v in any driver is indicative of impairment in his driving performance.

1989 **NSC**. A Model Program for the Control of Alcohol for Traffic Safety.

1992 **NSC**. Comm. Alc. and Other Drugs. Committee Handbook. Recommendations of minimum standards: training of personnel and techniques to determine impairment.

1995 **Commercial Drivers License Laws (49 CFR 40).** Employers of more than 50 staff: pre-employment, post-accident, reasonable suspicion, random, and return-to-duty testing. Breathe testing. Alcohol concentrations: 0.02 percent out-of-service; 0.04 percent loss-of-license.

As time passed, the increased technology has caused numbers to be more significant. The courts have relied on blood and breath alcohol concentrations as indicators of impairment, rather than the observations of the law enforcement officers. Increased fines and penalties, for driving under the influence of alcohol and other drugs, have caused much scrutiny in the courtrooms across the nation.

The North Dakota Chemical Test Operators Program follows and exceeds the recommended training schedule recommended by the National Safety Council. The supervisors, instructors, and field inspectors meet the minimum qualifications recommended. The instruments and methods used follow the guidelines. North Dakota has maintained a quality highway safety program with certified chemical test operators.

For a review and a historical perspective, read **Borkenstein, R.F.**; Journal of Studies on Alcohol, Supplement No. 10, July 1985, pp 3-12.

Materials reprinted with permission from the Traffic Institute, Indiana University; Bloomington, IN

INTOXILYZER 5000
(SERIES KB AND KB-EP)

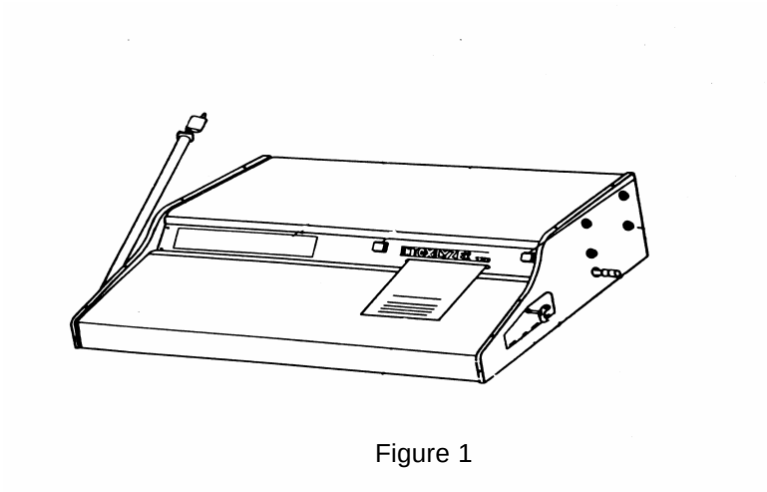

Figure 1

GENERAL INFORMATION

All of our present Intoxilyzer 5000 instruments were purchased from the manufacturer (CMI, Inc.) as Intoxilyzer 5000 EN's (meaning enhanced instruments). In North Dakota, we designate the **instruments with keyboards and internal printers** as **Intoxilyzer 5000 KB** and **the instruments with keyboards and external printers** as Intoxilyzer **5000 KB-EP**. The general material presented in this manual applies to both types of Intoxilyzer 5000's, except where noted.

Molecules absorb light of specific wavelengths, depending on their physical size and structure. For example, alcohol molecules absorb certain wavelengths of infrared energy. This pattern can serve as a "fingerprint" to identify a chemical, while the amount of infrared energy absorbed can serve to quantitate the amount of chemical which is present. Accordingly, the Intoxilyzer 5000 breath analysis instrument uses an infrared energy absorption technique to determine the alcohol concentration of a breath sample.

The heart of the Intoxilyzer 5000 instrument is the "analytical bench." This includes the sample chamber, a quartz iodide lamp, filter wheel, and a detector. The lamp emits infrared energy, which is directed through the chamber by a lens. At the opposite end of the chamber, a second lens focuses the energy leaving the chamber through five filters rotating on a wheel to a cooled infrared detector.

Initially, the instrument purges the sample chamber with room air. The Intoxilyzer then establishes a reference point by measuring the amount of infrared energy passing through the reference filter and striking the detector. During a breath test, as the amount of alcohol vapor in the chamber rises, the molecules absorb more infrared energy and the amount of infrared energy reaching the detector decreases. Therefore, by finding the difference between the reference point and the breath test measurement, the instrument determines breath alcohol concentration. Since a proportional

relationship exists between the amount of alcohol in one's breath and in one's blood, the unit calculates alcohol concentration in the breath sample and displays the result in weight by volume (g/210L) in accordance with the Uniform Vehicle Code and the North Dakota Century Code.

THEORY OF INFRARED ANALYSIS

The basis of infrared breath analysis is the absorption of infrared energy by alcohol molecules in the breath specimen. Infrared energy is not visible to the human eye. It can be described as"heat energy;" it is what is felt from a common, red-colored heat lamp.

The ethyl alcohol molecule is composed of atoms of carbon, hydrogen, and oxygen which are held together by chemical bonds. The atoms are constantly vibrating; that is, the bonds are stretching, bending, and causing the atoms to change their relative positions. When the alcohol molecule is exposed to infrared energy of specific wavelengths, some of the vibrational motions greatly increase after the molecule absorbs this energy. The amount of energy absorbed is proportional to the number of molecules present.

The ethyl alcohol (ethanol) molecule has a unique molecular structure. Ethanol absorbs different amounts of light at each of the five wavelengths specified by the five filters: 3.80µ, 3.47µ, 3.40µ, 3.52µ, and 3.36µ. Each time a sample is introduced into the Intoxilyzer 5000, the computer checks to see the relative amounts of absorption at the five filters. If the relative amounts are consistent with ethanol, the Intoxilyzer 5000 quantitates the ethanol concentration using the filter of 3.40µ.

Although there are many other hydrocarbons in expired human breath, usually methanol, iso-propanol, and acetone can achieve a concentration high enough to show significant light absorption in the Intoxilyzer 5000. In order for a compound to interfere or cause a false high reading on the Intoxilyzer 5000, it must be inhaled or ingested in sufficient quantity, be volatile enough to be given off in the breath sample, absorb infrared light at one of these wavelengths, and be safe enough at this concentration not to cause coma or death.

If, when comparing the intensity of the absorption of light between pairs of wavelengths (e.g. filters 1&2, 2&3, 3&4, 4&5, 2&4, 2&5, etc.), the Intoxilyzer 5000 determines that those ratios are identical to Ethanol, the instrument will give a reportable alcohol concentration. If on the other hand the ratios are not consistent with those of Ethanol, it will flag the sample as "Interferent Subtracted" or "Interferent Detected." Methanol (wood alcohol) and isopropanol have primary absorptions that are shifted slightly from 3.40µ. The Intoxilyzer incorporates a second wavelength, one at 3.52µ, to aid in distinguishing between alcohol and acetone. Alcohol will exhibit predictable light absorption at the two different wavelengths.

By comparing the resultant absorption at 3.40µ and 3.52µ, the Intoxilyzer 5000 is able to differentiate acetone from alcohol and deduct the acetone from any alcohol present. The other filters aide in detecting other huffing chemicals.

There are two fundamental scientific laws that enable the Intoxilyzer to render a breath alcohol concentration. The first is the **Lambert-Beer Law** that governs the absorption of light by molecules. The Intoxilyzer 5000 monitors the amount of infrared energy passing through the sample chamber from the lamp. It then measures the energy leaving the chamber and entering the detector. The molecules of alcohol in the sample chamber are due to the infrared energy absorbing the change. The ability to absorb specific light energy, or the **absorption coefficient**, is a constant for a given chemical molecule at a given wavelength. Thus, an ethyl alcohol molecule's absorption coefficient of infrared light at wavelength 3.40µ is a known factor and is a constant. The **path length** of the sample chamber is also a known distance. With all three of the above factors being constants (known quantities), the Lambert-Beer law can be used to calculate an alcohol concentration. By comparing the energy reading (voltage) on the detector between the room air and the breath sample, the alcohol concentration can be calculated.

The second scientific law used is **Henry's Law**. Henry's Law states that when a volatile compound is in solution in a closed container with air space above it, a known proportion (or ratio) of molecules will leave the liquid and enter the air space above the liquid. For this law to hold true, the liquid and air must be maintained at a constant temperature. By utilizing Henry's Law, the measured breathe alcohol concentration due to the relationship that exists between alcohol in the blood and alcohol in alveolar breath. To assure accurate test results, the Intoxilyzer 5000 breath analysis instrument also detects other volatile chemicals on the breath, which absorb the same infrared frequencies. The Intoxilyzer 5000 will sound an audible tone and display a message to indicate the presence of other volatiles. The operator should then stop the test and seek medical attention according to his/her agency's policy.

Thus the Intoxilyzer 5000, based on sound scientific principles and practices, can report an alcohol concentration in weight per volume as prescribed in the North Dakota Century Code, Section 39-20-07.

INSTRUMENT DESIGN AND FUNCTION

A schematic diagram of the Intoxilyzer 5000 is shown below in Figure 4-1. It uses standard AC electrical power as the primary power source. This AC current is converted into regulated DC power by the instrument. The regulated DC voltage is used to power the electronic circuits in the instrument.

A source lamp emits a broad spectrum of energy including infrared energy. A filtering system allows only selected infrared wavelengths to reach the photo detector. This energy then is converted to an electronic signal. It is the change, the intensity of this

signal that allows the instrument to evaluate and analyze alcohol concentration of the subject's breath sample.

The internal program directs the Intoxilyzer 5000 through distinct phases during the test. The instrument first checks its important systems. Then the instrument runs the analysis with the subject's breath specimen and a wet bath simulator solution. The steps include several air blanks wherein the instrument performs a system blank analysis. A scrolling electronic display provides instructions for the operator as the test proceeds.

The Intoxilyzer 5000 continuously monitors its important systems throughout the test. The instrument will invalidate the test if (at any point) an environmental testing condition, an improper instrument operating condition, or an operational mistake is detected. The operator may invalidate or stop the test at any point with the start test switch.

FIGURE 2: SCHEMATIC DIAGRAM OF THE INTOXILYZER 5000

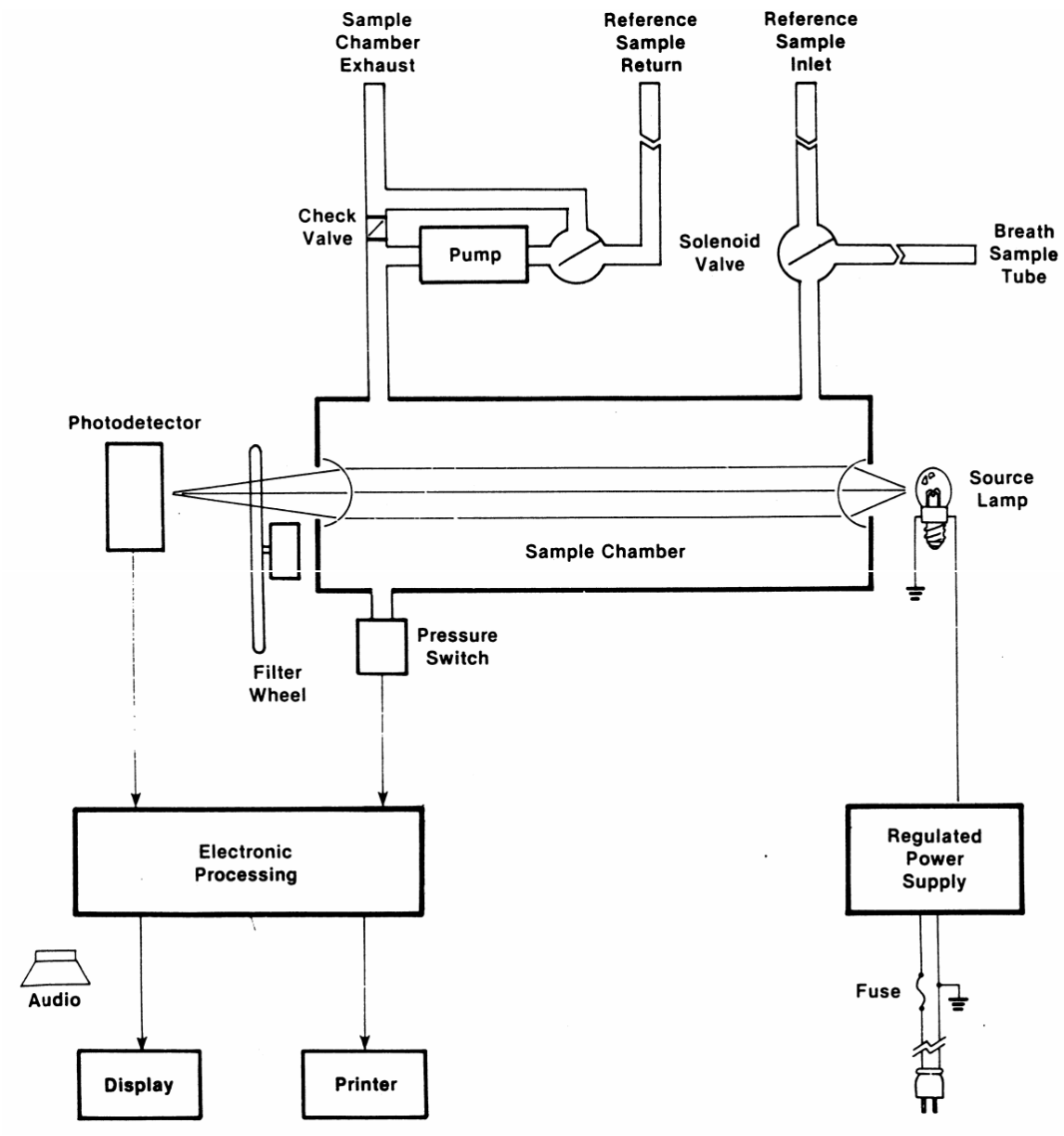

Figure 2

SATISFYING THE BREATH SAMPLE REQUIREMENTS

The Intoxilyzer 5000 is designed and programmed to obtain a breath specimen that is essentially alveolar (deep lung) air. It evaluates the breath according to **four** criteria:

1. **Flow**. The subject must blow steadily with a flow rate of 0.15 L per second. A continuous tone will sound.

2. **Minimum Volume**. (1.1 L)

3. **Level Slope**. The alcohol concentration should not go up or down.

4. **Time**. The subject must continue blowing one second after the volume and slope criteria have been met.

The subject has a **three-minute** period to deliver each of two breath samples in the North Dakota Custom Mode Sequence (CMS). The subject may stop and restart blowing into the Intoxilyzer 5000 during this time; however, the Intoxilyzer 5000 will judge the breath sample **adequate** if all four criteria are met. If any of the four criteria is not met, the instrument will indicate the sample to be **deficient** or an **invalid sample**. It may also indicate **interferent** present in the sample. (Also see "Malfunctions and Displayed Error Messages" in this section.)

PRELIMINARY SETUP OF THE INSTRUMENT

To assure adequate ventilation, locate the instrument at least one inch away from a back wall and on a hard surface—not on a surface covered with a rug-like material. The instrument's operational environment should be relatively dust-free. **The instruments power button should be left "on" between subject tests.**

WARNING

In keeping with standard safety practices, the metal base plate of the instrument is grounded through the third wire of the power cable. Surge protectors are provided with each Intoxilyzer 5000. Be sure it is in place to protect the Intoxilyzer 5000 from electrical surges or lightening strikes.

SUPPLIES AT EACH LOCATION

The Toxicology Division will provide the following supplies to each agency at the time of initial installation:

1. Intoxilyzer 5000

2. Surge protector

3. Mouthpieces

4. Test Records and Checklists (Form 106-KB) or an External Printer with paper

5. Intoxilyzer Record (Form 120-I)

6. Simulator with Standard Solution

Intoxilyzer 5000 field inspectors include scientists from the Toxicology Division, sergeants of the North Dakota Highway Patrol, and lead operators from Police Departments and Sheriff's Offices. Those individuals are trained to install Intoxilyzers and make minor repairs. They are designated on the List of Certified Chemical Test Operators that is filed with the Clerks of the District Court (or the person in charge or records) in each county.

Operators should contact the following people in case of **problems with the Intoxilyzer 5000** at their locations:

1. Operator in charge of their unit.

2. Toxicology Section.

3. NDHP District office.

PARTS, CONTROLS, AND INDICATORS (Figure 3)

Front View:

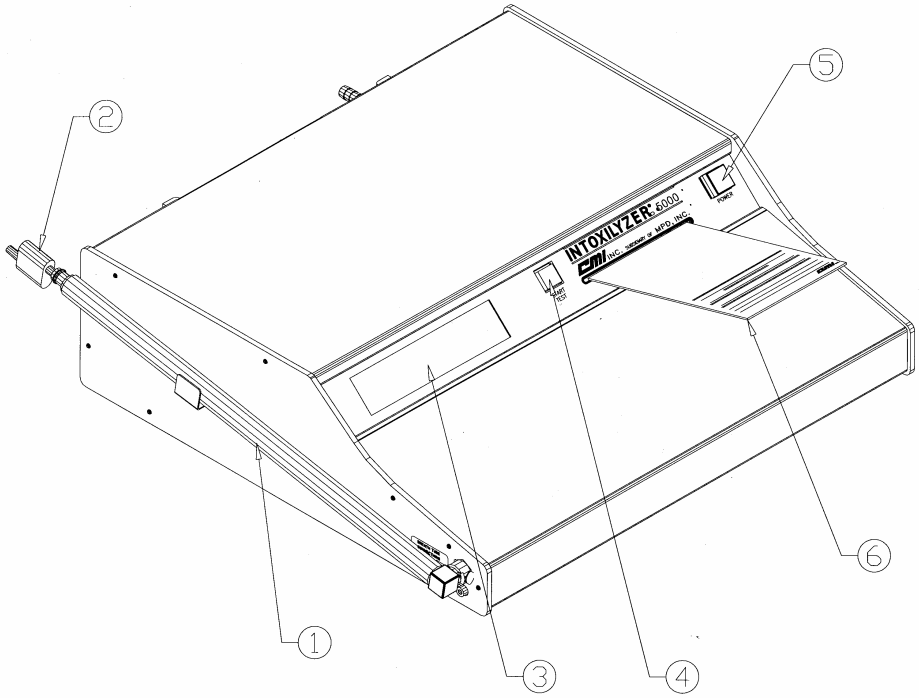

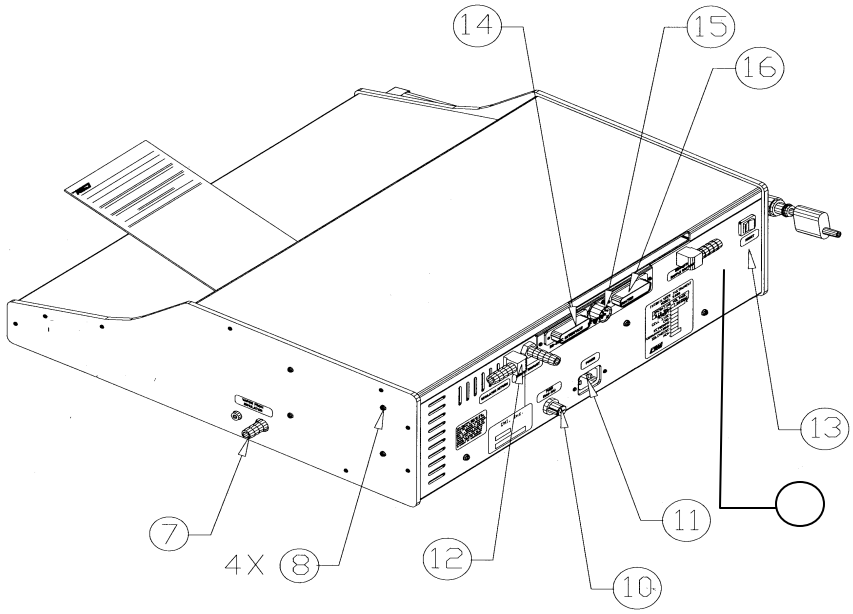

Back View:

The operators should be familiar with the names of the following parts, controls, and indicators when testifying in court/administrative hearings and reporting problems.

1. **Breath Tube.** A heated, reinforced plastic tube through which the subject blows into the sample chamber. It supports the RFI antenna.

2. **Mouthpiece.** A disposable, clear, plastic trap that fits in the end of the breath tube, accepts the subject's breath, and prevents unwanted substances from entering the instrument.

3. **Digital Display.** A 16 character, alpha-numeric read-out that relates which operation the instrument is performing, alerts the operator to required actions, and expresses alcohol concentration (AC) in weight per volume, g / 210 L.

4. **Start Test Switch.** A green push button switch used to initiate a test, or stop a test.

5. **Power Switch.** A red push button switch used to apply AC power to the instrument. **(Note: The Intoxilyzer 5000 KB (or KB-EP) should be left "on" at all times.)**

6. **Intoxilyzer Test Record and Checklist.** A formatted, multi-copy card that provides a printed record of the date, model and serial number of the instrument, test procedure, test results, and time of the test **(Form 106-KB)**.

7. **Simulator Vapor Port.** A plastic, male adapter through which alcohol vapor passes from an attached alcohol breath simulator to the instrument's sample chamber.

8. **Simulator Bracket Screws.** Four screws used to attach a bracket that holds the wet bath simulator.

9. **Serial Number Plate.** Identifies the particular Intoxilyzer 5000. (The Serial Number is also stenciled on the front cover).

10. **Three Amp Fuse.** Instrument's main fuse replacement (Three Amp Little fuse or Buss AGC3).

11. **Power Cord Socket.** An 8 foot cord that supplies power to the instrument.

12. **Simulator Vapor Port Outlet.** A brass fitting that allows tubing to keep simulator vapor in a recirculation mode.

13. **Computer Reset Switch.** A rocker switch activated **only** in isolated circumstances to cancel all operations and return the instrument to its initial "not ready" condition.

14. **Printer Connector.** The connector for the external printer.

15. **Keyboard Connector.** The connector for the keyboard.

16. **Modem Connector.** Telephone line connector for the modem.

KEYBOARD SELECTION

A **mode** is a series of steps that are directed by the EPROM of the Intoxilyzer 5000. On earlier models of the Intoxilyzer 5000, switches were used to call a specific mode. The Intoxilyzer 5000 KB's or KB-EP's use keyboard entries to select the mode of choice.

All Intoxilyzer 5000 operators will have access to running the North Dakota Custom Mode Sequence (CMS), the print test, the ACA or Calibration Check sequence, and the ABA or single-breath sequence.

Legend:

A = **Air Blank**. The instrument's pump purges the sample chamber and internal and external breath tubes.

B = **Breath Test**. The instrument analyzes a breath sample for alcohol concentration.

C = **Calibration Check or Simulator Test**. The instrument analyzes alcohol vapor from an attached wet bath simulator.

CHANGING THE TIME, DATE, OR LOCATION CODE

Field Inspectors will have access to changing the time, date, and location of the Intoxilyzer 5000, along with other modes. The toxicology staff can also change these items, remotely, by use of the computer modem.

The time will change automatically at the end of the year, the beginning and end of daylight savings time, and with a leap year. The field inspector or toxicology staff member must set the time zones.

COMPUTER MODEM

When the modem of the Intoxilyzer 5000 is connected to a phone line, operators may dial the phone number and "wake-up" the instrument. The modem connection allows for data transmission and troubleshooting from the Crime Laboratory Division, Toxicology Section.

VISUAL DISPLAYS

The Intoxilyzer 5000 has various types of displays to aid the operator in giving a breath test as follows:

1. **Flashing Displays.** These displays command the operator to act on a displayed message.

2. **Scrolling Displays.** These displays indicate that a command will follow. The instrument will not respond to an operator's actions until scrolling stops and the flashing display appears.
3. **Steady Displays.** These displays appear when a subject is giving an adequate sample and when the instrument is providing information to the operator.

AUDIBLE TONES

The Intoxilyzer 5000 sounds different tones to aid the operator in performing a breath test such as follows:

1. **Short Beep.** This sounds after the completion of each mode (operation).

2. **Continuous Tone.** This sounds while a subject blows into the mouthpiece.

3. **Low-High Tone.** This sounds intermittently for five seconds in the event of a malfunction, incorrect operational procedure, or unfulfilled test requirements.

When the instrument displays the command "PLEASE BLOW INTO MOUTHPIECE UNTIL TONES STOPS" and "PLEASE BLOW" (flashing); the subject has approximately three minutes to deliver an "adequate" breath sample. If the subject stops blowing before delivering an adequate breath sample and before the completion of the three minutes, "PLEASE BLOW" flashes on the display and a beep sounds every second. The beeping stops when the subject again begins to blow or the three minute period has lapsed.

DISPLAY MESSAGES AND COMMANDS

The Intoxilyzer 5000 instrument visually communicates to the operator by displaying the messages and commands. Each time the Intoxilyzer 5000 is turned "on" with the power switch, the unit must warm-up for a period of 20 minutes. During this time, the display will be blank. **All instruments should be left "on" at all times**. This will allow the Crime Laboratory Division staff to download the data and clear the memory of the Intoxilyzer as needed.

Usually the Intoxilyzer 5000 will be turned “on” and in the “Sleep Mode,” when you arrive at your agency to run an evidentiary test. “Wake up” the Intoxilyzer 5000 by depressing the “Start Test (Green) Switch.” The Intoxilyzer 5000 will display “NOT READY” or “WARM UP PERIOD,” followed by Diagnostic Test Series.

SLEEP MODE

The Intoxilyzer 5000 will start the Sleep Mode when:

1. The power is turned “on”.

2. After remaining idle for a pre-set time period.

The Sleep Mode conserves energy by turning off: the lamp, filter wheel, heated zones, and fan. To quit the Sleep Mode press the “Start Test” switch. The Intoxilyzer 5000 will take approximately three minutes to “wake up”.

Display Message:	**Meaning**:
“NOT READY” or “WARM UP PERIOD”	The Instrument turns on the filter wheel, the cooling fan, the heated zones, and the lamp. It takes approximately three minutes to stabilize these functions. The pump pulls in room air throughout the entire breath path. The Intoxilyzer warms up to temperature and then performs the following: **Diagnostic tests**:
“PROM CHECK ####”	The instrument is finding a check sum of all program bytes and is comparing it to an internal check sum.
“RAM CHECK #”	The instrument is checking each byte in RAM for possible failure.
“TEMP CHECK”	The instrument is checking the temperature of the sample chamber (**45**°± **5**°**C**).
“Ver ####### ####”	The version of the EProm is displayed.
“PRINTER CHECK”	The instrument is checking the movement of the printer head or if

	external printer is connected and contains paper. If all criteria are met for the above checks, the instrument displays:
“RTC CHECK“	The Real Time Clock is checked by the Intoxilyzer.
“INTERNAL STD”	The instrument monitors the electronics.
“DIAGNOSTIC OK”	The instrument did not find a malfunction while performing diagnostic checks on its components and operational standards.

If any one of the criteria is not met, an error message will appear. (See Malfunctions and Displayed Error Messages in this section.)

Following the “Diagnostic OK,” the Intoxilyzer 5000 will alternate the following four messages on the display:

1. "READY TO START*"

2. "ND MODEL"

3. "DATE ##/##/##"

4. "TIME ##HR ##MIN TZ"

If the “Start Test Switch” is depressed before the date and time is displayed, the date will be printed in part (example *5/*5/*5). **This does not invalidate the test. It is required, according to the “Approved Method,” that the operator writes the proper date on the Test Record (106-KB).**

If at any time the Intoxilyzer 5000 is not used for a set period of time (usually thirty minutes,) the unit will return to the “Sleep Mode.”

OPERATING PROCEDURES

The mucous lining of the mouth cavity and nasal passages store alcohol for 5-15 minutes after a person consumes an alcoholic beverage. Normal absorption eliminates residual mouth alcohol within 20 minutes. Therefore, **ascertain that the subject has not had anything to eat, drink, or smoke 20 minutes before performing an evidentiary test**. If the subject regurgitates or places anything to eat, drink, or smoke in his/her mouth, note the time and delay starting a breath test for at least 20 minutes.

Note: It is important to check the simulator temperature before starting the test.

NORTH DAKOTA CUSTOM MODE SEQUENCE

The North Dakota Custom Mode Sequence (CMS) was developed to provide a test sequence which would meet the requirements of the **Approved Method to Conduct Breath Tests With the Intoxilyzer 5000 KB (or KB-EP)** and recommendations of the National Safety Council for evidentiary breath testing.

This Approved Method(s) containing the Custom Mode Sequence, **must** be used for evidentiary breath analysis in cases dealing with DUI (also APC & MZT), HUI, and BUI.

The instrument will step through the **test sequence:**

1. Diagnostic Tests
2. A = Air Blank
3. B = Subject Breath
4. A = Air Blank
5. C = Calibration Standard or Simulator Test
6. A = Air Blank
7. B = Subject Breath
8. A = Air Blank

INTOXILYZER 5000 KB CUSTOM MODE SEQUENCE

The following messages, instructions, and/or commands will appear in the North Dakota Custom Mode Sequence program when the instrument is working properly, no errors occur during the test, and the instrument/operator does not terminate the test:

1. "READY TO START"; "ND MODEL"	To start the test, press ESC ESC, followed by the Start Test Switch (green).
2.	**Check the first box on the Test Record and Checklist (Form 106-KB) at this time to the left of "20 minute waiting period was ascertained."**
3. "INSERT TEST REC" (flashing)	Insert a Test Record into the slot on the front panel of the instrument.
	A set of Diagnostic Tests is run.
4. "PROM CHECK ####"	The instrument is finding a check sum of all program bytes and is comparing it to an internal check sum.
5. "RAM CHECK #"	The instrument is checking each byte in RAM for possible failure.
6. "TEMP CHECK"	The instrument is checking the temperature of the sample chamber (**45°**± **5°C**).
7. "Ver ####### ####"	The EProm Version is displayed.
8. "PRINTER CHECK"	The instrument is checking the movement of the printer head. If all criteria are met for the above checks, the instrument displays:
9. "RTC CHECK"	The Real Time Clock is checked.
10. "INTERNAL STD"	The instrument monitors the electronics.
11. "DIAGNOSTIC OK"	The instrument did not find a malfunction while performing diagnostic checks on its components and operational standards.

12. "ROOM AIR……..." TIME #### TZ DATE MM/DD/YYYY ROOM AIR .###	Instrument is purging the sample chamber and internal and external breath tube.
13. "ROOM AIR **.**###"	Room Air result is displayed.
14. "**.....**"	The instrument is establishing a zero reference point.
15. "PLEASE BLOW INTO MOUTH-PIECE UNTIL TONE STOPS" "PLEASE BLOW" (flashing)	Attach a clean mouthpiece to the breath tube. Request subject to blow into the mouthpiece until the tone stops. The subject has three minutes to provide an adequate breath sample containing alcohol. To insure delivery of a sufficient sample, the displayed command requests the subject to blow into the mouthpiece until the tone stops. The tone, however, continues while the subject blows with sufficient flow.
16. "PLEASE BLOW"	As the subject blows into the mouthpiece, the instrument sounds a continuous tone and displays the message to the left, "PLEASE BLOW." The continuous tone tells you that the subject is blowing with sufficient flow. The instrument will display the alcohol concentration value until the subject stops blowing and has delivered a sufficient breath sample. The instrument will also display the zero to the left of the decimal point indicating the subject has delivered an adequate breath sample. If the subject stops blowing before providing an "adequate sample," "PLEASE BLOW" flashes on the display and a beep sounds every second. If this occurs, request the subject to blow into the mouthpiece until the tone stops (no need to change mouthpiece.)

	In the event that the subject fails to provide an adequate breath sample within three minutes, “DEFICIENT” appears on the display accompanied by a low-high tone sounding intermittently for five seconds. Next, the instrument displays “SUBJECT TEST**.** ###” (the highest AC value obtainable from the given breath samples) and completes the mode sequence. On the evidence card, the instrument indicates the highest obtainable AC value by printing an asterisk (*) before “SUBJECT TEST ###.” The asterisk (*) is a cross reference to the message printed at the bottom on the evidence card, “*DEFICIENT SAMPLE-VALUE PRINTED WAS HIGHEST OBTAINED.”
17. “SUBJECT TEST**.** ###”	Subject Test will be displayed for one minute. Remove and discard the mouthpiece. **Check the box to the left of “A clean mouthpiece was used for and disposed of after the first subject test.”**
18. “ROOM AIR”	The instrument is purging the sample chamber and internal and external breath tube.
19. “ROOM AIR**.** ###”	The “Room Air” result is displayed.
20. “SIM TEMP=”	You must enter a four character temperature. It must fall between 33.8° and 34.2^{o} C.
21. “**.....**”	The instrument is rechecking its zero reference point.
22. “STD. SOL.”	The pump fills the sample chamber with the standard vapor from the attached simulator. This is a check on the calibration of the Intoxilyzer 5000.

23. “STD. SOL. **.**###”	The instrument is displaying the simulated AC value. If the value is outside the acceptable range, the operator may stop the test. **Check the box to the left of “Standard Solution test completed.”**
24. “ROOM AIR”	The instrument is purging the sample chamber and internal and external breath tubes.
25. “ROOM AIR **.**###”	The “Room Air” result is displayed.
26. “**.....**”	The instrument is rechecking its zero reference point. Insert a new mouthpiece in the end of the breath tube.
27. “PLEASE BLOW INTO MOUTH-PIECE UNTIL TONE STOPS”; “PLEASE BLOW” (flashing)	Request the subject to blow into the mouthpiece until the tone stops. The subject has three minutes to provide an adequate breath sample. To ensure delivery of an adequate sample, the displayed command requests the subject to blow into the mouthpiece until the tone stops. The tone. however, continues while the subject blows with sufficient flow.
28. “PLEASE BLOW”	As the subject blows into the mouthpiece, the instrument sounds a continuous tone and displays the message to the left, “PLEASE BLOW.” The continuous tone tells you that the subject is blowing with sufficient flow. The instrument will display the alcohol concentration value until the subject stops blowing and has delivered a sufficient breath sample. The instrument will also display the zero indicating when the subject delivered an adequate breath sample. If the subject stops blowing before providing an adequate sample, “PLEASE BLOW” flashes on the display and a beep sounds every second. If this

	occurs, request the subject to blow into the mouthpiece until the tone stops (no need to change the mouthpiece). In the event that the subject fails to provide an adequate breath sample within three minutes, “DEFICIENT SAMPLE” appears on the display accompanied by a low-high tone sounding intermittently for five seconds. Next, the instrument displays “SUBJECT TEST **.**###” (the highest AC value obtainable from the given breath samples) and completes the mode sequence. On the evidence card, the instrument indicates the highest obtainable AC value by printing an asterisk (*) before “SUBJECT TEST ###.” The asterisk (*) is a cross-reference to the message printed at the bottom on the evidence card, “*DEFICIENT SAMPLE - VALUE PRINTED WAS HIGHEST OBTAINED.”
29. “SUBJECT TEST **.**###”	The Subject Test will be displayed for one minute. Remove and discard the mouthpiece. **Check the box to the left of “A clean mouthpiece was used for and disposed of after the second subject test.”**
30. “ROOM AIR”	The instrument is purging the sample chamber and internal and external breath tube.
31. “ROOM AIR **.**###”	The Room Air result is displayed.
32. “Difference OK” or “Diff. Too Great”	The Intoxilyzer indicates if a difference between the Subject Test 1 and Subject Test 2 meets the criteria for agreement (0.02 AC). **The test record should be signed at this point.**

33. "ALL BOXES CHECKED AT COMPLETION OF STEP AND TEST RECORD SIGNED?" Followed by "REC SIGNED Y/N?" (Flashing)	The operator should answer the question.
34. REVIEW DATA? Y/N	The operator can only review the data of the answer in the previous step.
35. "TEST COMPLETE"	Remove the test record after it is released by the instrument.
36. PRINTING (FLASHING)	
37. "PUSH BUTTON TO REPRINT CARD" alternating "REPRINT CARD"	If the first printout is not legible and you want the instrument to reprint the test results, **push Start Test**. The instrument will display "INSERT TEST REC." You will have approximately one minute to insert a new test record card into the card slot or paper in the external printer. After the instrument receives the card, it will reprint the test results and return to "READY TO START."
38. "READY TO START"	The instrument is ready to begin another test.

If the Intoxilyzer 5000 is not used for a set period of time, the unit will return to the "sleep mode."

Test Record Form 106- KB (Sample A):

Test Date ?

? Intoxilyzer Serial Number and Software Version

```
CMI INC
INTOXILYZER   ALCOHOL ANALYZER
ND MODEL 5000            SN 68-011181
08/23/2003                     07/00

 TEST                  AC       TIME
01 DIAGNOSTIC OK    45±5      DEG C
02 ROOM AIR         .000     20:53 CDT
03 SUBJECT TEST 1   .266     20:54 CDT
04 ROOM AIR         .000     20:55 CDT
05 STD. SOL.        .101     20:57 CDT
06 ROOM AIR         .000     20:58 CDT
07 SUBJECT TEST 2   .264     20:59 CDT
08 ROOM AIR         .000     21:00 CDT

09 REPORTED AC      .26      20:59 CDT

    DIFFERENCE OK

    NO RFI DETECTED
10 SIM TEMP=34.0   LOCATION=TOXL

SUB NAME=CMS, NA, NA
SUB DOB =00/00/00
SUB SEX =FEMALE   WEIGHT =000
TEST=DUI CIT=NA
DR. LIC.=NA/NA
SIMUL SER NO=G9846
STD SOL. NO=493
COUNTY=08 OPER NO =107501
ALL BOXES CHECKED AT COMPLETION OF
STEP AND TEST REC SIGNED Y/N? Y
```

? Reported Results and Time

Keyboard Entry

All Four (4) Boxes Must Be Checked

- [x] 20 minute waiting period was ascertained
- [x] A clean mouthpiece was used for and disposed of after the first subject test
- [x] Standard Solution test completed
- [x] A clean mouthpiece was used for and disposed of after the second subject test

followed the Approved Method and the instructions displayed by the Intoxilyzer in conducting this test.

Operator's Signature Marge Larson

Remarks:

? Signature

(A)

Form 106-KB (8-99)

INTOXILYZER TEST RECORD AND CHECKLIST
State Toxicologist • Bismarck, ND 58501

OPERATOR COPY

INTOXILYZER 5000 KB-EP CUSTOM MODE SEQUENCE

Display Message:	**Meaning or Required Operation Action:**
1. "READY TO START"; "ND MODEL"	To start the test, push ESC, ESC, followed by the Start Test Switch (green).
2. "20 MIN WAIT?" Y/N	Answer if the 20 minute wait was ascertained.
3. "#PRNT COPIES?"	Answer about the number of copies needed (usually four for DUI's).
4. "SUB LAST NAME=" "SUB FIRST NAME=" "SUB MI=" "SUB DOB= MMDDYY" "SUB SEX= M/F "SUB WEIGHT="	The questions should be answered, followed by the Enter key:
5. "DUI TEST?" Y/N	**The operator should indicate the reason for the test:** Driving Under the Influence, Actual Physical Control, or Minor Zero Tolerance
"MIC TEST?" Y/N	Minor in Consumption
"BUI TEST?" Y/N	Boating Under the Influence
"HUI TEST?" Y/N	Hunting Under the Influence
"WRK TEST?" Y/N	Work Release
"SUI TEST?" Y/N	Snowmobiling Under the Influence
"OTHER TEST?" Y/N	ATV or Field Inspectors tests
"CITATION NO=" "DRIVERS LIC NO=" "STATE OF ISSUE="	(Two letter code)
"SIMUL SER NO="	(**Enter simulator serial number here, not Intoxilyzer serial number**)
"STD SOL NO=" "COUNTY ARREST="	(Two number code)
"OPER NO="	(Six number code)
"REVIEW DATA?" Y/N	("Y" will allow the operator to correct any typos or false information, "N" will allow the Intoxilyzer to proceed with the Diagnostic test).

	A set of Diagnostic Tests is run:
6. ”PROM CHECK ####”	The instrument is finding a check sum of all program bytes and is comparing it to an internal check sum.
7. “RAM CHECK #”	The instrument is checking each byte in RAM for possible failure.
8. “TEMP CHECK”	The instrument is checking the temperature of the sample chamber (**45°± 5°C**).
9. “Ver ####### ####”	The EProm Version is displayed.
10. “PRINTER CHECK”	The instrument is checking the movement of the printer head. If all criteria are met for the above checks, the instrument displays the following:
11. “RTC Check”	The Real Time Clock is checked by the Intoxilyzer.
12. “Internal Std”	The instrument monitors the electronics of the Intoxilyzer.
13. “DIAGNOSTIC OK”	The instrument did not find a malfunction while performing diagnostic checks on its components and operational standards. It will then display four scrolling messages as follows:
14. “ROOM AIR……..”	The instrument is purging the sample chamber and internal and external breath tube.
15. “ROOM AIR **.**###”	The Room Air result is displayed.
16. “**.....**”	The instrument is establishing a zero reference point. Insert a new mouthpiece in the end of the breath tube.
17. “PLEASE BLOW INTO MOUTH-PIECE UNTIL TONE STOPS” “PLEASE BLOW” (flashing)	Attach a clean mouthpiece to the end of the breath tube and request the subject to blow into the mouthpiece until

the tone stops. The subject has three minutes to provide an adequate breath sample containing alcohol.

18. “PLEASE BLOW”

As the subject blows into the mouthpiece, the instrument sounds a continuous tone and displays the message to the left, “PLEASE BLOW.” The continuous tone tells you that the subject is blowing with sufficient flow and that the sample contains alcohol.

The instrument will display the alcohol concentration value until the subject stops blowing and has delivered a sufficient breath sample. The instrument will also display the zero to the left of the decimal point indicating the subject has delivered an adequate breath sample.

If the subject stops blowing before providing a sufficient sample, “PLEASE BLOW” flashes on the display and a beep sounds every second. If this occurs, request the subject to blow into the mouthpiece until the tone stops (no need to change the mouthpiece).

In the event that the subject fails to provide an adequate breath sample within three minutes, “DEFICIENT” appears on the display accompanied by a low-high tone sounding intermittently for five seconds. Next, the instrument displays “SUBJECT TEST **.**###” (the highest AC value obtainable from the given breath samples) and completes the mode sequence. On the evidence card, the instrument indicates the highest obtainable AC value by printing an asterisk (*) before “SUBJECT TEST .###.” The asterisk (*) is a cross-reference to the message printed at the bottom on the evidence card, “*DEFICIENT SAMPLE - VALUE PRINTED WAS HIGHEST OBTAINED.”

19. "SUBJECT TEST **.**###"	The Subject Test will be displayed for one minute. Remove and discard the mouthpiece.
20. "CLN MTH PC?" Y/N	Answer if a clean mouthpiece was used.
21. "Y"	**"Y" will remain on the display to pause the test.**
22. "ROOM AIR **.**###"	The Room Air result is displayed.
23. "SIM TEMP=" (flashing)	You must enter a four character temperature. It must fall between 33.8°and 34.2^{o} C.
24. "**.....**"	The instrument is rechecking its zero reference point.
25. "STD. SOL. ###"	The pump fills the sample chamber with the standard vapor from the attached simulator. This is a check on the calibration of the Intoxilyzer 5000.
26. "STD. SOL. **.**###"	The instrument is displaying the simulated AC value. If the value is outside the acceptable range, the operator may stop the test.
27. "ROOM AIR .###"	The instrument is purging the sample chamber and internal and external breath tubes. The Room Air result is displayed
28. "STDSOLTST COMP?"	Answer if the simulator test has completed.
29. "**.....**"	The instrument is rechecking its zero reference point. Insert a new mouthpiece in the end of the breath tube.
30. "PLEASE BLOW INTO MOUTH-PIECE UNTIL TONE STOPS"; "PLEASE BLOW" (flashing)	Request the subject to blow into the mouthpiece until the tone stops. The subject has three minutes to provide an adequate breath sample.

To ensure delivery of an adequate sample, the displayed command requests the subject to blow into the mouthpiece until the tone stops. The tone, however, continues while the subject blows with sufficient flow.

31. “PLEASE BLOW .###”

As the subject blows into the mouthpiece, the instrument sounds a continuous tone and displays the message to the left, “PLEASE BLOW.” The continuous tone tells you that the subject is blowing with sufficient flow.

The instrument will display the alcohol concentration value until the subject stops blowing and has delivered a sufficient breath sample. The instrument will also display the zero indicating when the subject delivered an adequate breath sample.

If the subject stops blowing before providing an adequate sample, “PLEASE BLOW” flashes on the display and a beep sounds every second. If this occurs, request the subject to blow into the mouthpiece until the tone stops (no need to change the mouthpiece).

In the event that the subject fails to provide an adequate breath sample within three minutes, “DEFICIENT SAMPLE” appears on the display accompanied by a low-high tone sounding intermittently for five seconds. Next, the instrument displays “SUBJECT TEST .###” (the highest AC value obtainable from the given breath samples) and completes the mode sequence. On the evidence card, the instrument indicates the highest obtainable AC value by printing an asterisk (*) before “SUBJECT TEST .###.” The asterisk (*) is a cross-reference to the message printed at the bottom on the evidence card, “*DEFICIENT SAMPLE - VALUE PRINTED WAS HIGHEST OBTAINED.”

32. “SUBJECT TEST **.**###”	The Subject Test will be displayed. Remove and discard the mouthpiece.
33. “ROOM AIR.###”	The instrument is purging the sample chamber and internal and external breath tube. The Room Air result is displayed.
34. “CLN MTH PC?” Y/N	Answer if a clean mouthpiece was used.
35. “Y”	“Y” will remain on the display to pause the test.
36. “Difference OK” or “Diff. Too Great”	The Intoxilyzer indicates if the difference between the Subject Test 1 and Subject Test 2 meets the criteria for agreement (0.02 AC).
37. “TEST COMPLETE”	Remove the copies of the test record after they are printed. **Sign all copies.**
38. PRINTING (FLASHING)	
39. “PUSH BUTTON TO REPRINT CARD” alternating with “REPRINT CARD”	If the first printout is not legible and you want the instrument to reprint the test results, **push Start Test**. The instrument will reprint the test results and return to “READY TO START.” **Sign all copies.**
40. “READY TO START”	The instrument is ready to begin another test.

If the Intoxilyzer 5000 is not used for a set period of time, the unit will return to the “Sleep Mode.”

Test Record Form 106-KB-EP (Sample B):

Intoxilyzer Test Record And Checklist
State Toxicologist Bismarck, ND 58501

CMI INC
INTOXILYZER - ALCOHOL ANALYZER
ND MODEL 5000 SN 68-011782
08/23/2003 11/01

TEST	AC	TIME
01 DIAGNOSTIC OK	45±5	DEG C
02 ROOM AIR	.000	20:47 CDT
03 SUBJECT TEST 1	.276	20:47 CDT
04 ROOM AIR	.000	20:50 CDT
05 STD. SOL.	.109	20:51 CDT
06 ROOM AIR	.000	20:52 CDT
07 SUBJECT TEST 2	.274	20:54 CDT
08 ROOM AIR	.000	20:55 CDT
09 REPORTED AC	.27	20:54 CDT

DIFFERENCE OK

NO RFI DETECTED
10 SIM TEMP=34.0 LOCATION=UNDP

SUB NAME=CMS,NA,NA
SUB DOB =00/00/00
SUB SEX =FEMALE WEIGHT =000
TEST=DUI CIT=NA
DR. LIC.=NA/NA
SIMUL SER NO=G9846
STD SOL NO=493
COUNTY=08 OPER NO =107501

20 minute waiting period ascertained? Y
A clean mouthpiece was used for and
disposed of after the first subject test? Y
Standard Solution test completed? Y
A clean mouthpiece was used for and
disposed of after the second subject test? Y

I followed the approved method and the instructions
displayed by the intoxilyzer in conducting this test.

OPERATOR'S SIGNATURE Margaret A Pearson

Remarks:

Form 106-KB-EP

CONSISTENCY IN BREATH SAMPLES FOR EVIDENTIARY TESTS

The operator should obtain consistent breath sampling. You should coach the subject to do this, " BLOW until told to STOP." If the subject is blowing with constant flow, the continuous tone will sound.

The operator should then watch the display until the ZERO to the left of the decimal point appears. At this point, the flow, volume, slope, and time requirements have been met.

The operator should then coach the subject to continue to BLOW for a certain count (suggested 3-4). This will ensure the instrument will lock in the alcohol concentration and you are sampling the breath consistently.

MALFUNCTIONS AND DISPLAYED ERROR MESSAGES

Diagnostic Errors:

When one turns "on" the Intoxilyzer 5000 breath analysis instrument, "NOT READY" appears on the display. While in the "NOT READY" mode, the instrument purges its sample chamber; initializes the computer, processor, and printer; and deactivates the Start Test button. Upon exiting the "NOT READY" mode, the instrument performs a set of diagnostic checks on its components and operational standards.

If the unit locates a malfunction while performing the diagnostic checks, the display gives an error message and a **low-high tone sounds** intermittently for five seconds. For example, if radio frequency interference is detected, the low-high tone will sound, the test will be halted, and "Inhibited RFI" is printed. A test cannot be started until the instrument completes the diagnostic checks without finding a malfunction.

Given below are the error messages that may appear on the display during the diagnostic checks and the actions you should take in response to a given error message:

Display Error Message:	**Meaning and/or Corrective Operator Actions:**
"TEMP ERROR"	The sample chamber temperature is outside the range of 45±5°C.
"PRINTER ERROR" (KB)	The printer is likely jammed from dust or test record scraps.
"RAM ERROR ###"	The instrument is indicating where a malfunction exists. The number following "RAM ERROR" denotes the actual address location of the error.

“PRINTER ERROR” or “PRINTER OFF-LINE OR OUT OF PAPER” (KB-EP)	Check the paper tray and add paper. Press RESET on the back of the Intoxilyzer. If the error re-appears, check the printer cables. Press RESET or “ReBoot*” on the Intoxilyzer (and printer).
(No Test Record is Printed)	This means no valid test is completed. A Test Record cannot be printed. Make note of this and Repeat the Intoxilyzer test or get blood or urine. (See the previous paragraph to correct a “PRINTER ERROR.”)

***”ReBoot” Intoxilyzer 5000 (& Printer)**

1. Turn off the Intoxilyzer 5000 power.

2. KB: unplug the Intoxilyzer 5000 power cord and keyboard from the back of the Intoxilyzer 5000.

3. KB-EP: unplug the printer power keyboard cord and printer cable from the back of the Intoxilyzer 5000.

4. Wait about 20 seconds for capacitors to discharge.

5. Plug-in the cords and cable.

6. Turn “**on**” the Intoxilyzer 5000 (red button).

7. Press the Start Test Switch (green).

8. Press the Intoxilyzer 5000 RESET Switch.

<u>Corrective Action for any Error</u>:

If the Intoxilyzer 5000 does not perform an automatic reset, the operator may depress the reset switch or “ReBoot” the Intoxilyzer 5000 and printer. The Intoxilyzer 5000 will then perform a set of diagnostic tests. If “Ready to Start” appears on the display, the Intoxilyzer 5000 is operational. If an error message re-appears, the operator should shut down the instrument and obtain a blood or urine sample.

Other Error Messages:

Following are other error messages that may appear on the display. The error messages are accompanied by a low-high tone sounding intermittently for five seconds.

Displayed Error Message:	**Meaning and/or Corrective Operator Action:**
Intox 5000 KP Test Record does not print **Header**.	**Reprint the test record** within one minute of initial printing. Complete and sign the record. Copies of all Test Records should be given to the prosecutor, subject, and the Toxicology Section. An additional copy should be made and sent along with the Report and Notice to DOT.
"UNSTABLE REF."	The microprocessor was unable to obtain a stable reference signal from the processor. The instrument halts the test and prints "UNABLE TO OBTAIN STABLE REFERENCE"; "INVALID TEST" and prepares itself to start another test. If the instrument is set in "DVM TEST" when "UNSTABLE REF." appears on the display, the instrument returns to "NOT READY" followed by the diagnostic checks. When the display reads "READY TO START," begin another test by pushing the Start Test button. If "UNSTABLE REF." again appears on the display, trip the Computer Reset Switch located on the back of the Instrument. The instrument will return to "NOT READY" and subsequently performs the diagnostic checks. If the instrument completes the diagnostic checks without finding a malfunction, try running another test. If "UNSTABLE REF." again appears on the display, turn the instrument "off" and contact the Toxicology Laboratory.
"INVALID SAMPLE"	The instrument detected residual mouth alcohol in the subject's breath sample. The instrument completes the mode sequence, prints "INVALID SAMPLE .XXX" in place of "SAMPLE TEST .###." **Since normal body processes eliminate residual mouth alcohol within 20 minutes,**

observe the subject for at least 20 minutes before beginning another breath analysis. During the observation time, the subject may not smoke, eat, or drink. Furthermore, if the subject regurgitates, have the subject rinse out his/her mouth, note the time, and delay beginning a breath analysis for 20 minutes.

"INHIBITED – RFI"	High-level radio frequency interference is present. The instrument halts the test, prints "INHIBITED RFI," and prepares itself to start another test. If the instrument is set in "DVM TEST" when radio frequency interference activates the RFI detector, the instrument returns to "NOT READY" followed by the diagnostic checks. Locate the RFI source and either remove the source from the instrument's operational environment or move the instrument to a new environment free from RFI. **Note:** if the instrument is moved, a certified field inspector must complete an "Installation and Repair" form **before** the instrument is put back into service.
"DEFICIENT SAMPLE"	The subject did not supply an adequate breath sample within three minutes. The instrument displays "*SUBJECT TEST.###" (The highest AC value obtained from the given breath samples) and completes the mode sequence. On the evidence card, the instrument indicates the highest obtainable AC value by printing an asterisk (*) before "SUBJECT TEST.###." The asterisk (*) is a cross-reference to the message printed at the bottom of the evidence card, "*DEFICIENT SAMPLE - VALUE PRINTED WAS HIGHEST OBTAINED." When the display reads "READY TO START," you may begin another breath analysis.
"INTERFERENT"	**Interferent constitutes an invalid test**. The subject's breath sample contains a substance, such as acetone, that absorbs the same infrared wavelengths that alcohol absorbs. When the Intoxilzyer 5000 flags the sample, the operator should stop the test by depressing

	the “Start Test Switch”. The operator should then seek medical assistance for the subject according to his/her agency policy and choose a blood or urine sample for evidence.
“AMBIENT FAILED”	The room air is contaminated with chemicals that would interfere with the alcohol analysis, such as alcohol, smoke, cleaning supplies, or paint fumes. The operator may clear the environment of the Intoxilyzer 5000 or choose a different test as evidence.
“ NO TEST RECORD PRINTED”	Repeat entire test or get blood or urine sample. Write a note on test “NO TEST RECORD PRINTED—REPEATED TEST.”

EVIDENCE CARD JAMMED IN INTOXILYZER 5000 KB WITH INTERNAL PRINTER

If an evidence card is jammed in the printer, push the Start Test button to stop the test. The instrument will invalidate the test and try to return the evidence card. If the instrument does not return the evidence card, **gently** pull the card from the printer. In the event that a section of the card tears off and remains jammed in the printer, turn the instrument “off” and contact the Toxicology Section.

GENERAL MALFUNCTIONS

In the event of a general malfunction (e.g. the display gives erratic information), take the following action(s):

1. Push the Start Test button.

2. If pushing “Start Test” fails to correct the malfunction, trip the Computer Reset Switch on the instrument back one time to return the instrument to “NOT READY.”

3. If the instrument completes the diagnostic checks without displaying an error message and the malfunction continues, turn it “off” and contact the Toxicology Section.

4. If the instrument fails to respond, “ReBoot” the Intoxilyzer (and printer).

TEST RECORDS REPORTING ERRORS

All test records, which are printed, must be preserved and submitted as evidence. The lower half of the test records reporting error messages should be completed and signed, prior to submitting with the valid tests. **DO NOT destroy them as they are considered evidence**.

“Sample C” indicates the locations on the test record (106-KB) where information and Error Messages can be found.

KB Test Record Pointing Out Places to Look for Errors (Sample C):

Check For Printing Edge

This side up. This edge in.

Test Date ?

Intoxilyzer 5000 Serial No. & Software Version ?

```
UNI INC
INTOXILYZER   ACCURAL BREATHALYZER
 D MODEL 5000                SN 68-011181
 3/04/2003                          07/00

 TEST                  AC        TIME
01 DIAGNOSTIC OK     45±5       DEG C
02 ROOM AIR          .000      13:41 CDT
03 SUBJECT TEST 1    .044      13:41 CDT
04 ROOM AIR          .000      13:42 CDT
05 STD. SOL.         .107      13:45 CDT
06 ROOM AIR          .000      13:46 CDT
07 SUBJECT TEST 2    .113      13:47 CDT
08 ROOM AIR          .000      13:47 CDT

09 REPORTED AC       .04       13:41 CDT

    DIFFERENCE TOO GREAT

    NO RFI DETECTED
10 SIM TEMP=34.0    LOCATION=TOXL

SUB NAME=CMS, NA, NA
SUB DOB =00/00/00
SUB SEX =FEMALE    WEIGHT =000
TEST=DUI CIT=NA
DR. LIC.=NA/NA
SIMUL SER NO=68011181
STD SOL NO=493
COUNTY=08 OPER NO =107501
  L BOXES CHECKED AT COMPLETION OF
  EP AND TEST REC SIGNED Y/N? Y
```

Calibration Check Results ?

Interferent Detected (If Present)

Reported Results & Time ?

Difference ST1-ST2 = 0.020 <u>or</u> Less ?

Location Code ?

Review For Errors

Correction Made On Test Record ?

Operator Had Entered Intox. Ser. No. In Lieu of Sim. Ser. No. Cross Out Incorrect Number, Write In Correction, and Initial.

Area For Invalid Test Information

All Four (4) Boxes Must Be Checked

- ☒ 20 minute waiting period was ascertained
- ☒ A clean mouthpiece was used for and disposed of after the first st
- ☒ Standard Solution test completed
- ☒ A clean mouthpiece was used for and disposed of after the second subject test

I followed the Approved Method and the instructions displayed by the Intoxilyzer in conducting this test.

Operator's Signature Margy Pearson ?

Must Be Signed

Remarks:

NOTHING IN MOUTH - TWICE

Form No. ? Form 106-KB (8-99)

INTOXILYZER TEST RECORD AND CHECKLIST
State Toxicologist • Bismarck, ND 58501

OPERATOR COPY ?

Where To Send Copy

DETECTION OF RESIDUAL MOUTH ALCOHOL

It is important to determine if the breath sample testing positive is due to any alcohol in the mouth cavity that has not been absorbed into the bloodstream (residual mouth alcohol).

While the Intoxilyzer 5000 has a slope detector* to detect residual mouth alcohol, the Approved Method(s) to Conduct Breath Tests With the Intoxilyzer 5000 KB and KB-EP further check for this by requiring the operator to do the following:

1. Ascertain a 20-minute wait or deprivation period.

2. Take two breath tests at least four minutes apart (automatically timed by the instrument).

3. Requires alcohol concentrations to agree within 0.02 g/210 L of deep lung air.

Note: *The Intoxilyzer 5000 has a Slope Detector which indicates invalid samples (Invalid Sample-.XXX).

If either the first or second Subject Sample indicates "**Invalid Sample. XXX**," the entire test shall be considered invalid. The operator should stop the test and wait another 20-minute deprivation period prior to initiating the next test.

Note: The operator may request to rinse his/her mouth with water prior to the 20-minute wait.

OTHER MODE OPTIONS AVAILABLE TO ALL OPERATORS

All operators can access Menu Number One. This is done by pressing, "Esc, Esc," followed by "Enter, Enter." The menu will appear on the display as, "1 B, C, P, Q."

Legend:

B: Indicates the mode: ABA
C: Indicates the mode: ACA
P: Indicates the print test
Q: Allows the operator to quit and return to the "Ready to Start"

The operator should key the letter of the option, followed by the Enter key.

The single breath test (ABA) can be used for any subject test other than: DUI, APC, MZT, HUI, BUI, SUI, or ATV. Those purposes may be MIC, Parole/Probation, Work Release, or a parent's request.

Note: There are no Approved Methods for ABA and ACA tests.

The ACA Test will be covered in "The Simulator and Standard Solution." The Print test will be done as part of the lab exercises.

Procedural Steps of the ABA Test Intoxilyzer 5000 KB are as follow:

Display Message:	**Meaning or Required Operation Action:**
1. "READY TO START"; "ND MODEL"	To start the test, push "ESC" followed by "Enter," "Enter."
2.	**Check the first box on the Test Record and Checklist (Form 106-KB) at this time to the left of, "20 minute waiting period was ascertained." (This is optional for MIC, WRK Test or Other.)**
3. "INSERT TEST REC" (flashing)	Insert a Test Record into the slot on the front panel of the instrument.
4. SUB LAST NAME= SUB FIRST NAME= SUB MI= SUB DOB = MMDDYY SUB SEX = M/F SUB WEIGHT =	The questions should be answered, followed by the Enter Key.
5.	**The operator should indicate the reason for the test: ABA Mode should be used for "MIC," "WRK Test," or "Other Test" only.**
DUI TEST Y/N?	Enter "N" for No (this is in ABA Mode)
MIC TEST Y/N?	Enter "Y" for Yes
BUI TEST Y/N?	Enter "N" for No
HUI TEST Y/N?	Enter "N" for No
WRK TEST Y/N?	Enter "Y" for Yes
SUI TEST Y/N?	Enter "N" for No

OTHER TEST Y/N?	Enter “Y” for Yes
CITATION NO=	
DRIVERS LIC NO=	
STATE OF ISSUE=	(Two letter code)
SIMUL SER NO=	(**Enter the simulator serial number here, not the Intoxilyzer serial number)**
STD SOL NO=	
COUNTY ARREST=	(Two number code)
OPER NO=	(Six number code)
REVIEW DATA? Y/N	(“Y” will allow the operator to correct any typos or false information and “N” will allow the Intoxilyzer to proceed with the Subject Test) **<u>Note</u>: No Diagnostic Tests will be performed during this test.**
6. “ROOM AIR **.**###” TIME #### TZ DATE MM/DD/YYYY ROOM AIR .###	The Room Air result is displayed.
7. “**.....**”	The instrument is establishing a zero reference point. Insert a new mouthpiece in the end of the breath tube.
8. “PLEASE BLOW INTO MOUTH-PIECE UNTIL TONE STOPS”, “PLEASE BLOW” (flashing):	Request the subject to blow into the mouthpiece until the tone stops. The subject has three minutes to provide an adequate breath sample containing alcohol. To ensure delivery of a sufficient sample, the displayed command requests the subject to blow into the mouthpiece until the tone stops. The tone, however, continues while the subject blows with sufficient flow.
9. “PLEASE BLOW”	As the subject blows into the mouthpiece, the instrument sounds a continuous tone and displays the message to the left, “PLEASE BLOW.”

The continuous tone tells you that the subject is blowing with sufficient flow.

The instrument will display the alcohol concentration value until the subject stops blowing and has delivered a sufficient breath sample. The instrument will also display the zero to the left of the decimal point indicating the subject has delivered an adequate breath sample.

If the subject stops blowing before providing an "adequate sample," "PLEASE BLOW" flashes on the display and a beep sounds every second. If this occurs, request the subject to blow into the mouthpiece until the tone stops (no need to change the mouthpiece).

In the event that the subject fails to provide an adequate breath sample within three minutes, "DEFICIENT" appears on the display accompanied by a low-high tone sounding intermittently for five seconds. Next, the instrument displays "SUBJECT TEST **.**###" (the highest AC value obtainable from the given breath samples) and completes the mode sequence. On the evidence card, the instrument indicates the highest obtainable AC value by printing an asterisk (*) before "SUBJECT TEST .###." The asterisk (*) is a cross reference to the message printed at the bottom on the evidence card "*DEFICIENT SAMPLE - VALUE PRINTED WAS HIGHEST OBTAINED."

10. "SUBJECT TEST **.**###"

The Subject Test will be displayed for one minute. Remove and discard the mouthpiece.

11.

Check the box to the left of "A clean mouthpiece was used for and disposed of after the first subject test."

12. “ROOM AIR **.**###”	The instrument is purging the sample chamber and internal and external breath tube. The “Room Air” result is displayed.
13. “PRINTING” (FLASHING)	Remove the test record after the instrument releases it. Sign the Test Record after printing. Cross out the boxes and statements not used.
14. “PUSH BUTTON TO REPRINT CARD” alternating with “REPRINT CARD”	If the first printout is not legible and you want the instrument to reprint the test results, **push Start Test**. The instrument will display “INSERT TEST REC.” You will have approximately one minute to insert a new test record card into the card slot or paper in the external printer. After the instrument receives the card, it will reprint the test results. Sign the Test Record and check the appropriate boxes.
15. “READY TO START”	The instrument is ready to begin another test.

If the Intoxilyzer 5000 is not used for a set period of time, the unit will return to the “Sleep Mode.”

Test Record Form 106-KB ABA Mode (Sample D):

CMI INC
INTOXILYZER ALCOHOL ANALYZER
ND MODEL 5000 SN 68-011181
08/23/2003 07/00

TEST	BAC	TIME
01 ROOM AIR	.000	20:29 CDT
02 SUBJECT TEST 1	.167	20:30 CDT
03 ROOM AIR	.000	20:30 CDT
04 REPORTED AC	.16	20:30 CDT

NO RFI DETECTED
05 SIM TEMP=??.? LOCATION=TOXL

SUB NAME=ABA, NA, NA
SUB DOB =00/00/00
SUB SEX =FEMALE WEIGHT =000
TEST=MIC CIT=NA
DR. MIC.=NA/NA
SIMUL SER NO=69846
STD SOL NO=433
COUNTY=08 OPER NO =107501
ALL BOXES CHECKED AT COMPLETION OF
STEP AND TEST REC SIGNED Y/N?

☐ ~~Breath mouthpiece was not used.~~

☒ A clean mouthpiece was used for and disposed of after the first subject test.

☐ ~~Standard Solution was not used.~~

☐ ~~A clean mouthpiece was used for and disposed of after the second subject test.~~

I followed the Approved Method and the instructions displayed by the Intoxilyzer in conducting this test.

Operator's Signature Mary Pearson

Remarks:

(D) MIC

Form 106-KB
(3-99)

INTOXILYZER TEST RECORD AND CHECKLIST
State Toxicologist • Bismarck, ND 58501

OPERATOR COPY

Test Record Form 106-KB-EP (Sample E):

Intoxilyzer Test Record And Checklist
State Toxicologist Bismarck, ND 58501

CMI INC
INTOXILYZER - ALCOHOL ANALYZER
ND MODEL 5000 SN 68-011782
08/23/2003 11/01

TEST	AC	TIME
01 ROOM AIR	.000	20:26 CDT
02 SUBJECT TEST	.169	20:26 CDT
03 ROOM AIR	.000	20:27 CDT
04 REPORTED AC	.16	20:26 CDT

NO RFI DETECTED
05 SIM TEMP=??.? LOCATION=UNDP

SUB NAME=ABA,NA,NA
SUB DOB =00/00/00
SUB SEX =FEMALE WEIGHT =000
TEST=MIC CIT=NA
DR. LIC.=NA/NA
SIMUL SER NO=G9846
STD SOL NO=493
COUNTY=08 OPER NO =107501

I followed the approved method and the instructions displayed by the intoxilyzer in conducting this test.

OPERATOR'S SIGNATURE Mary Pearson

Remarks:

MIC

Form 106-KB-EP

Test Record Form 106-KB (Sample F):

```
CMI INC
INTOXILYZER  ALCOHOL ANALYZER
ND MODEL 5000              SN 68-011181
08/23/2003                        07/00

 TEST                  AC        TIME
01 DIAGNOSTIC OK    45±5      DEG C
02 ROOM AIR         .000      20:43 CDT
03 SUBJECT TEST 1   .267      20:43 CDT
04 ROOM AIR         .000      20:44 CDT
05 STD. SOL.        .099      20:46 CDT
06 ROOM AIR         .000      20:47 CDT
07 SUBJECT TEST 2   .104      20:48 CDT
08 ROOM AIR         .000      20:49 CDT

09 REPORTED AC      .10       20:48 CDT

    DIFFERENCE TOO GREAT

    NO RFI DETECTED
10 SIM TEMP=34.0   LOCATION=TOXL

SUB NAME=CMS, NA, NA
SUB DOB =00/00/00
SUB SEX =FEMALE   WEIGHT =000
TEST=DUI CIT=NA
DR. LIC.=NA/NA
SIMUL SER NO=69846
STD SOL NO=493
COUNTY=08 OPER NO =107501
ALL BOXES CHECKED AT COMPLETION OF
STEP AND TEST REC SIGNED Y/N? Y
```

☒ 20 minute waiting period was ascertained

☒ A clean mouthpiece was used for and disposed of after the first subject test

☒ Standard Solution test completed

☒ A clean mouthpiece was used for and disposed of after the second subject test

I followed the Approved Method and the instructions displayed by the Intoxilyzer in conducting this test.

Operator's Signature Mary Pearson

Remarks:

(F) NOT VALID
GOT Blood

Form 106-KB
(8-99)

INTOXILYZER TEST RECORD AND CHECKLIST
State Toxicologist • Bismarck, ND 58501

OPERATOR COPY

Test Record Form 106-KB-EP (Sample G):

Intoxilyzer Test Record And Checklist
State Toxicologist Bismarck, ND 58501

CMI INC
INTOXILYZER - ALCOHOL ANALYZER
ND MODEL 5000 SN 68-011782
08/22/2003 11/01

TEST	AC	TIME
01 DIAGNOSTIC OK	45±5	DEG C
02 ROOM AIR	.000	19:16 CDT
03 SUBJECT TEST 1	.141	19:18 CDT
04 ROOM AIR	.000	19:19 CDT
05 STD. SOL.	.110	19:20 CDT
06 ROOM AIR	.000	19:21 CDT
07 ROOM AIR	.000	19:22 CDT

SUB NAME=TEST D,NA,NA
SUB DOB =00/00/00
SUB SEX =FEMALE WEIGHT =000
TEST=DUI CIT=NA
DR. LIC.=NA/NA
SIMUL SER NO=G9846
STD SOL NO=493
COUNTY=08 OPER NO =107501
INVALID TEST
SAMPLE INTRODUCED
AT IMPROPER TIME.

I followed the approved method and the instructions displayed by the intoxilyzer in conducting this test.

OPERATOR'S SIGNATURE Mary Pierson

Remarks:

NOT VALID

REPEATED BREATH TEST

SUBJECT BLEW TOO SOON

Form 106-KB-EP

Test Record Form 106-KB-EP (Sample H):

Intoxilyzer Test Record And Checklist
State Toxicologist Bismarck, ND 58501

CMI INC
INTOXILYZER - ALCOHOL ANALYZER
ND MODEL 5000 SN 68-011782
08/22/2003 11/01

TEST	AC	TIME
01 DIAGNOSTIC OK	45±5	DEG C
02 ROOM AIR	.000	16:29 CDT
03 SUBJECT TEST 1	.097	16:29 CDT
04 INTERFERENT SUBTRACTED		
05 ROOM AIR	.000	16:30 CDT

SUB NAME=TEST B,NA,NA
SUB DOB =00/00/00
SUB SEX =FEMALE WEIGHT =000
TEST=DUI CIT=NA
DR. LIC.=NA/NA
SIMUL SER NO=DR3555
STD SOL NO=493
COUNTY=08 OPER NO =107501
INVALID TEST

I followed the approved method and the instructions displayed by the intoxilyzer in conducting this test.

OPERATOR'S SIGNATURE Margaret A Reaum

Remarks:

Got Med Help
NOT VALID

Got Blood Sample

Form 106-KB-EP

Test Record Form 106-KB-EP (Sample I):

Intoxilyzer Test Record And Checklist
State Toxicologist Bismarck, ND 58501

CMI INC
INTOXILYZER - ALCOHOL ANALYZER
ND MODEL 5000 SN 68-011782
08/22/2003 11/01

TEST	AC	TIME
01 DIAGNOSTIC OK	45±5	DEG C
02 ROOM AIR	.000	20:29 CDT
03 INTERFERENT DETECTED		
04 ROOM AIR	.000	20:30 CDT

SUB NAME=METHANOL,NA,NA
SUB DOB =00/00/00
SUB SEX =FEMALE WEIGHT =000
TEST=DUI CIT=NA
DR. LIC.=NA/NA
SIMUL SER NO=G9846
STD SOL NO=493
COUNTY=08 OPER NO =107501
INVALID TEST
INTERFERENT DETECTED

I followed the approved method and the instructions displayed by the intoxilyzer in conducting this test.

OPERATOR'S SIGNATURE Mary Clauson

Remarks:

NOT VALID
WENT FOR MED ATTN
GOT BLOOD

Form 106-KB-EP

QUALITY ASSURANCE IN BREATH TESTING

Chemical Test Operators:

The first line of quality assurance starts with the Chemical Test Operator. The Approved Method must be followed with **"scrupulous compliance"**. With each subject test, the operator performs a **check on the calibration** of the Intoxilyzer 5000.

The Quality Assurance (QA) included on each subject test is as follows:

1. The Intoxilyzer 5000 performs QA steps:

   A) Diagnostic Testing for limited functions on Intoxilyzer.

2. The Approved Method requires these additional QA steps:

   A) Allows two adequate subject samples with agreement.
   Note: one deficient subject breath may still be used as a valid test.

   B) A calibration check is done.

   C) Room Air testing is done before and after each AC.

Copies of all Test Records should be given to the prosecutor, subject, and the Toxicology Section. An additional copy should be made and sent along with the Report and Notice to DOT.

The simulator solution should be changed (in a timely fashion*****), an ACA test completed, and copies of the paperwork should be forwarded to the Toxicology Section. This test is done to **check the calibration** of the Intoxilyzer 5000.

***The number of solution bottles sent to each location will be based on their need. Consequently, it is possible some locations may use the solution with a certain batch number for longer than a month, while other locations may use standard solutions from different batches in the same month. Each bottle of solution may be used on up to fifty (50) Intoxilyzer 5000 tests or forty-five (45) days, whichever comes first.**

Field Inspectors:

Checks on the calibration must be completed each time the Intoxilyzer 5000 is moved. This is done even when the Intoxilyzer 5000 is moved within an office. The Field Inspector may do minor repairs. Following those repairs, tests are performed to **check the calibration** of the Intoxilyzer 5000. Installation and Repair Checkout forms are completed. This paperwork is forwarded to the Toxicology Section.

Toxicology Section Staff:

Toxicology Staff who have completed factory training for the repair and maintenance of the Intoxilyzer 5000, can install, repair, and inspect the instruments for certification by the State Toxicologist. Formal inspections (done each year) may be done in the field where the Intoxilyzer 5000 is being used or at the Crime Laboratory Division. Tests include **checks on the calibration** of the Intoxilyzer 5000 at various alcohol concentrations, a check on the RFI detector, and a check for interfering substances. An Inspection Form is completed and filed. Sometimes, the Intoxilyzer 5000 requires routine maintenance. The instrument is transported to the Crime Laboratory Division for repair and maintenance. A Repair and Maintenance Form is completed each time major repairs are performed. **All calibrations of the Intoxilyzer 5000's may be done in conjunction with repair and maintenance or the inspection at the Crime Laboratory Division.**

All corresponding paperwork is filed at the Crime Laboratory Division. An annual list of Intoxilyzer 5000 Serial Numbers, along with the date and location of the last Inspection, will be filed with the Clerks of Court (or the person in charge of records) in each county.

APPROVED METHOD TO CONDUCT BREATH TESTS WITH THE INTOXILYZER 5000 KB LETTER OF CERTIFICATION

State of North Dakota)
)ss
County of Burleigh)

I, Margaret A. Pearson, do hereby certify that I am a duly-appointed State Toxicologist for the State of North Dakota and an official custodian of the records and files of the office thereof, that I have carefully compared the **APPROVED METHOD TO CONDUCT BREATH TESTS WITH THE INTOXILYZER 5000 KB (JULY 1, 2004)** hereto attached with the respective original as the same appears of record on file in the Office of Attorney General, Crime Laboratory Division, in the County of Burleigh, North Dakota, and find the same to be a true and correct copy thereof and of the whole thereof. In witness whereof I have set my hand at the city of Bismarck, in said county this **1ST** day of **JULY**, **2004**.

Margaret A. Pearson, State Toxicologist

State of North Dakota)
)ss
County of Burleigh)

On this **1ST** day of **JULY, 2004**, before me personally appeared Margaret A. Pearson, known to me to be a State Toxicologist for the State of North Dakota, acknowledged to me that she has executed the same.

Subscribed to and sworn before me this **1ST** day of **JULY**, **2004**

Cindy Leingang, Notary Public, State of North Dakota
My Commission Expires January 11, 2005

CINDY LEINGANG
Notary Public, STATE OF NORTH DAKOTA
My Commission Expires JANUARY 11, 2005

APPROVED METHOD TO CONDUCT BREATH TESTS WITH THE INTOXILYZER 5000 KB (PAGE ONE)

OFFICE OF ATTORNEY GENERAL
Crime Laboratory Division
2635 East Main Avenue (58501)
P.O. Box 937
Bismarck, ND 58502-0937

Tel. (701) 328-6159
(800) 296-2054
Fax (701) 328-6145

July 1, 2004

APPROVED METHOD TO CONDUCT BREATH TESTS WITH THE INTOXILYZER 5000 KB

The Approved Method to Conduct Breath Tests With the Intoxilyzer 5000 KB constitutes following the procedure outlined in this document and the instructions displayed by the Intoxilyzer. All operators will type the information requested and check the boxes on the left-hand side of the Intoxilyzer Test Record and Checklist (Form 106-KB) following completion of each of the procedural steps. Periodically, the Intoxilyzer 5000 KB will ask if the operator wishes to review the inputted information. The operator may review and correct the data as needed. Upon review, if any of the data printed is incorrect, the operator may amend the test record by crossing out the incorrect inputted data and printing the correction on the test record.

Instrument Preparation:

To turn the instrument on, depress the "Power" (red) switch. If the Intoxilyzer 5000 KB utilizes the power saver feature, the operator should depress the "Start Test" (green) switch. At this stage, the instrument will display "Not Ready" and/or "Warm Up Period." The instrument should be allowed sufficient time to warm-up and complete a series of diagnostic checks. When these internal diagnostic checks have been completed, the instrument will display "Ready to Start" as one of the alternating displays. The Intoxilyzer is now ready for a test. If the instrument is already displaying "Ready to Start," the operator may begin the test sequence at this stage.

Testing Procedure:

Before proceeding, the operator must ascertain that the subject has had nothing to eat, drink, or smoke within twenty minutes prior to the collection of the breath sample. To initiate a test, press the "Esc" key twice. The display will read "PASSWORD=." Depress the "Start Test" switch. The display will flash "Insert Test Rec." Before the display time expires, insert a Form 106-KB into the instrument. Once the Form 106-KB is inserted, the operator should enter the requested information. At the completion of the entry, the operator may review the data and make any necessary corrections. The Intoxilyzer will perform a series of diagnostic checks. Only when the internal diagnostic checks are completed, will it proceed to test a sample of room air. During this test, the display will read "Room Air," the time, and the date. Upon completion of the room air test, the display will alternate between a scrolled instruction of "Please Blow Into Mouthpiece Until Tone Stops" and a flashing directive of "Please Blow." At this point, the operator should place a clean mouthpiece in the end of the breath tube and instruct

Margaret A Pearson 1 July 2004

APPROVED METHOD TO CONDUCT BREATH TESTS WITH THE INTOXILYZER 5000 KB (PAGE TWO)

the subject to blow into the mouthpiece.[1] If the instrument accepts the breath as an adequate sample, the subject test result will be displayed. The operator should remove the mouthpiece from the breath tube and dispose of it. After the sample chamber has been cleared, and the room air test result has been completed by the instrument, the display will ask for the simulator temperature. The operator should enter the temperature of the simulator, review it, and correct it if necessary. The proper operating temperature of the simulator is 34.0 ± 0.2°C. The instrument will automatically pump in simulator solution vapor. It will then analyze the alcohol concentration and display it. The operator should check the box on the Form 106-KB. Room air will once again be pumped through the sample chamber until it is cleared of standard solution vapor and a room air test displayed. When the display scrolls the instruction "Please Blow Into Mouthpiece Until Tone Stops" followed by a flashing directive of "Please Blow," the operator should place another clean mouthpiece in the breath tube and instruct the subject to blow into the mouthpiece.[1] If the instrument accepts the breath as an adequate sample, the subject test result will be displayed. The operator should remove the mouthpiece from the breath tube and dispose of it. Room air will once again be pumped through the chamber to clear it and the room air test results displayed. The display will then read "Difference OK" or "Diff. Too Great." At this time, the Form 106-KB should be signed. The scrolling display will show "All boxes checked at completion of step and test rec signed Y/N?" followed by a flashing display "Rec signed Y/N?" Enter "Y" if the check boxes were checked and the Form 106-KB has been signed. The display will flash "Printing" as the printer prints the Form 106-KB and feeds it out of the instrument. "Test Complete" will appear on the display. Remove the Form 106-KB and observe it for legibility. When the Test Record is printed at the end of the test, if upon review any of this inputted information is incorrect, the operator may amend the Test Record by crossing out the incorrect inputted information and then writing the correction on the Test Record.

A scrolling display will show "Push Button to Reprint Card" followed by a flashing directive of "Reprint Card." If the printed Form 106-KB is illegible, press the "Start Test" switch. When the display reads "Insert Test Record," place a new Form 106-KB in the Intoxilyzer. The printer will print the test information on the new Form 106-KB and eject it from the instrument. Remove the second Form 106-KB from the instrument and transfer the information from the first to the second Form 106-KB, sign it, and retain both copies for evidentiary purposes.

The test record will identify the instrument as a "ND Model 5000" along with the serial number. The instrument type is indicated on the "List of Approved Chemical Testing Devices."

---

[1]As the subject blows into the mouthpiece with sufficient pressure, the instrument sounds a continuous tone and displays "Please Blow." If the subject's breath does not contain alcohol, the tone will stop after a few seconds. However, if the instrument detects alcohol in the breath, the tone will continue as long as the subject blows with sufficient pressure. When the operator considers a satisfactory sample of breath has been collected, the subject may be asked to stop. However, if the instrument does not accept that breath as an adequate sample, a display of "Please Blow" will appear along with an intermittent beeping sound. If this happens, the subject may be asked for an additional breath sample(s).

Margaret A Beam 1 July 2004

APPROVED METHOD TO CONDUCT BREATH TESTS WITH THE INTOXILYZER 5000 KB (PAGE THREE)

The North Dakota Intoxilyzer 5000 KB test sequence shall include these tests in the following order: diagnostic test, room air test, subject test, room air test, standard solution test, room air test, subject test, and room air test.

AC (alcohol concentration) is expressed as grams of alcohol per two hundred ten liters of alveolar air, whether or not such a designation is printed on the Form 106-KB. If radio frequency interference is not detected during any part of the test sequence, the instrument will print "No RFI Detected" on the Form 106-KB.

Interpretation of Test:

If the Intoxilyzer 5000 fails to print a test record, the test will be considered invalid.

The results of adequate breath samples will be printed as "Subject Test 1" or "Subject Test 2."

Only the tests so designated shall be considered valid and are referred to hereafter as Subject Tests. The first two digits of the lower of the two subject tests will be reported as the alcohol concentration.

If any breath sample is determined by the Intoxilyzer to be deficient, the instrument will print "*Subject Test" followed by the highest alcohol concentration obtained during the test and will also identify that the sample was deficient.

If both breath samples rendered by the subject in any one test sequence are not adequate samples, or if the numerical difference between "Subject Test 1" and "Subject Test 2" is greater than 0.020, that entire test shall be considered invalid.

If one of the two breath samples rendered by the subject in any one test sequence is not adequate, or the subject does not provide one of the two samples, the single test obtained shall constitute a valid test and the first two digits of that test will be reported as the alcohol concentration.

If an asterisk "*" is included in the date or an incorrect date is printed, the operator shall write the correct date on the Form 106-KB. This alone will not cause the test to be invalid.

If "Interferent" is noted on the display or test record, the test will be considered invalid. The operator should obtain an alternative sample for evidentiary purposes.

If "Invalid Sample" is noted on the display or test record, the test will be considered invalid. The operator may abort or complete that test, and then administer another Intoxilyzer 5000 after waiting another 20 minutes and ascertaining that the subject does not eat, drink or smoke anything.

This method is effective for use with the Intoxilyzer Test Record and Checklist (Form 106-KB). The previous approved method and the Intoxilyzer Records (Form 106-KB or Form 106-I) will remain approved and will be considered valid when used in conjunction with each other.

Margaret A Bleson
1 July 2004

Page 3 of 4

APPROVED METHOD TO CONDUCT BREATH TESTS WITH THE INTOXILYZER 5000 KB (PAGE FOUR)

When the test is conducted according to this method, it is considered as fairly administered and the result obtained is scientifically accepted as accurate.

Margaret A Pearson
1 July 2004

Page 4 of 4

APPROVED METHOD TO CONDUCT BREATH TESTS WITH THE INTOXILYZER 5000 KB-EP LETTER OF CERTIFICATION

State of North Dakota)
)ss
County of Burleigh)

I, Margaret A. Pearson, do hereby certify that I am a duly-appointed State Toxicologist for the State of North Dakota and an official custodian of the records and files of the office thereof, that I have carefully compared the **APPROVED METHOD TO CONDUCT BREATH TESTS WITH THE INTOXILYZER 5000 KB-EP (JULY 1, 2004)** hereto attached with the respective original as the same appears of record on file in the Office of Attorney General, Crime Laboratory Division, in the County of Burleigh, North Dakota, and find the same to be a true and correct copy thereof and of the whole thereof. In witness whereof I have set my hand at the city of Bismarck, in said county this **1ST** day of **JULY**, **2004**.

Margaret A. Pearson, State Toxicologist

State of North Dakota)
)ss
County of Burleigh)

On this **1ST** day of **JULY, 2004**, before me personally appeared Margaret A. Pearson, known to me to be a State Toxicologist for the State of North Dakota, acknowledged to me that she has executed the same.

Subscribed to and sworn before me this **1ST** day of **JULY**, **2004**.

Cindy Leingang, Notary Public, State of North Dakota
My Commission Expires January 11, 2005

CINDY LEINGANG
Notary Public, STATE OF NORTH DAKOTA
My Commission Expires JANUARY 11, 2005

APPROVED METHOD TO CONDUCT BREATH TESTS WITH THE INTOXILYZER 5000 KB-EP (PAGE ONE)

OFFICE OF ATTORNEY GENERAL
Crime Laboratory Division
2635 East Main Avenue (58501)
P.O. Box 937
Bismarck, North Dakota 58502-0937

Tel. (701) 328-6159
(800) 296-2054
Fax (701) 328-6145

July 1, 2004

APPROVED METHOD TO CONDUCT BREATH TESTS WITH THE INTOXILYZER 5000 KB-EP

The Approved Method to Conduct Breath Tests With the Intoxilyzer 5000 KB-EP constitutes following the procedure outlined in this document and the instructions displayed by the Intoxilyzer. All operators will type the information requested and answer the questions when prompted. Periodically, the Intoxilyzer 5000 KB-EP will ask if the operator wishes to review the inputted information. The operator may review and correct the data as needed. The Test Record and Checklist will be printed as Form 106-KB-EP, at the completion of the subject test. Upon review, if any of the data printed is incorrect, the operator may amend the test record by crossing out the incorrect inputted data and printing the correction on the test record.

Instrument Preparation:

To turn the instrument on, depress the "Power" (red) switch. If the Intoxilyzer 5000 KB-EP utilizes the power saver feature, the operator should depress the "Start Test" (green) switch. At this stage, the instrument will display "Not Ready" and/or "Warm Up Period." The instrument should be allowed sufficient time to warm-up and complete a series of diagnostic checks. When these internal diagnostic checks have been completed, the instrument will display "Ready to Start" as one of the alternating displays. The Intoxilyzer is now ready for a test. If the instrument is already displaying "Ready to Start," the operator may begin the test sequence at this stage.

Testing Procedure:

To initiate a test, press the "Esc" key twice. The display will read "PASSWORD=." Depress the "Start Test" switch. Before proceeding, the operator must ascertain that the subject has had nothing to eat, drink, or smoke within twenty minutes prior to the collection of the breath sample by answering the question "20 MIN WAIT? Y/N." Then, "# PRNT COPIES?" will appear on the display. The operator should then enter the number of copies needed, followed by the information requested. At the completion of the entry, the operator may review the data and make any necessary corrections. The Intoxilyzer will perform a series of diagnostic checks. Only when the internal diagnostic checks are completed, will it proceed to test a sample of room air. During this test, the display will read "Room Air," the time, and the date. Upon completion of the room air test, the display will alternate between a scrolled instruction of "Please Blow Into Mouthpiece Until Tone Stops" and a flashing

Margaret A Beaver
1 July 2004

APPROVED METHOD TO CONDUCT BREATH TESTS WITH THE INTOXILYZER 5000 KB-EP (PAGE TWO)

directive of "Please Blow." At this point, the operator should place a clean mouthpiece in the end of the breath tube and instruct the subject to blow into the mouthpiece.[1] If the instrument accepts the breath as an adequate sample, the subject test result will be displayed. The operator should remove the mouthpiece from the breath tube and dispose of it. Then the instrument will ask the operator if a clean mouthpiece was used and disposed of by displaying "CLN MTHPC? Y/N." The operator should answer the question whether a clean mouthpiece was used and disposed of. After the sample chamber has been cleared, and the room air test result has been completed by the instrument, the display will ask for the simulator temperature. The operator should enter the temperature of the simulator. The proper operating temperature of the simulator is 34.0± 0.2°C. The instrument will automatically pump in simulator solution vapor. It will then analyze the alcohol concentration and display it. Room Air will once again be pumped through the sample chamber until it is cleared of standard solution vapor and a room air test displayed. The instrument will display "STD SOL TST COMP?." The operator should answer the question whether the standard solution test has been completed. When the display scrolls the instruction "Please Blow Into Mouthpiece Until Tone Stops" followed by a flashing directive of "Please Blow," the operator should place another clean mouthpiece in the breath tube and instruct the subject to blow into the mouthpiece.[1] If the instrument accepts the breath as an adequate sample, the subject test result will be displayed. The operator should remove the mouthpiece from the breath tube and dispose of it. Then the instrument will ask if a clean mouthpiece was used and disposed of by displaying "CLN MTHPC? Y/N." The operator should answer the question whether a clean mouthpiece was used and disposed of. Room air will once again be pumped through the chamber to clear it and the room air test results displayed. The display will then read "Difference OK" or "Diff. Too Great" if two breath samples are determined to be adequate. The printer prints the Form 106-KB-EP and feeds it out of the instrument. "PRINTING" will flash on the display. Remove the Form 106-KB-EP and observe it for legibility. When the test record is printed at the end of the test, if upon review any of this inputted information is incorrect, the operator may amend the test record by crossing out the incorrect inputted information and then writing the correction on the test record. Sign all printed copies.

A scrolling display will show "Push Button to Reprint Card" followed by a flashing directive of "Reprint Card." If the printed Form106-KB-EP is illegible, press the "Start Test" switch. The printer will print the test information and checklist as a Form 106-KB-EP and eject it from the printer. Remove the second Form 106-KB-EP from the printer and sign all copies. Retain both sets of copies for evidentiary purposes.

The Test Record will identify the instrument as a "ND Model 5000" along with the serial number. The instrument type is indicated on the "List of Approved Chemical Testing Devices."

---

[1]As the subject blows into the mouthpiece with sufficient pressure, the instrument sounds a continuous tone and displays "Please Blow." If the subject's breath does not contain alcohol, the tone will stop after a few seconds. However, if the instrument detects alcohol in the breath, the tone will continue as long as the subject blows with sufficient pressure. When the operator considers a satisfactory sample of breath has been collected, the subject may be asked to stop. However, if the instrument does not accept that breath as an adequate sample, a display of "Please Blow" will appear along with an intermittent beeping sound. If this happens, the subject may be asked for additional breath sample(s).

Margaret A Beaver
1 July 2004

Page 2 of 3

APPROVED METHOD TO CONDUCT BREATH TESTS WITH THE INTOXILYZER 5000 KB-EP (PAGE THREE)

The North Dakota Intoxilyzer 5000 KB-EP test sequence shall include these tests in the following order: diagnostic test, room air test, subject test, room air test, standard solution test, room air test, subject test, and room air test.

AC (alcohol concentration) is expressed as grams of alcohol per two hundred ten liters of alveolar air whether or not such a designation is printed on the Form 106-KB-EP.

If radio frequency interference is not detected during any part of the test sequence, the instrument will print "No RFI Detected" on the Form 106-KB-EP.

Interpretation of Test:

If the Intoxilyzer 5000 fails to print a test record, the test will be considered invalid.

The results of adequate breath samples will be printed as "Subject Test 1" or "Subject Test 2."

Only the tests so designated shall be considered valid and are referred to hereafter as Subject Tests. The first two digits of the lower of the two subject tests will be reported as the alcohol concentration.

If any breath sample is determined by the Intoxilyzer to be deficient, the instrument will print "*Subject Test" followed by the highest alcohol concentration obtained during the test and will also identify that the sample was deficient.

If both breath samples rendered by the subject in any one test sequence are not adequate samples, or if the numerical difference between "Subject Test 1" and "Subject Test 2" is greater than 0.02, that entire test shall be considered invalid.

If one of the two breath samples rendered by the subject in any one test sequence is not adequate or the subject does not provide one of the two samples, the single test obtained shall constitute a valid test and the first two digits of that test will be reported as the alcohol concentration.

If an asterisk "*" is included in the date or an incorrect date or time is printed, the operator shall write the correct date on the Form 106-KB-EP. This alone will not cause the test to be invalid.

If "Interferent" is noted on the display or test record, the test will be considered invalid. The operator should obtain an alternative sample for evidentiary purposes.

If "Invalid Sample" is noted on the display or test record, the test will be considered invalid. The operator may abort or complete that test, and then administer another Intoxilyzer 5000 after waiting another 20 minutes and ascertaining that the subject does not eat, drink or smoke anything.

If "Interferent" is noted on the test record, the test will be considered invalid.

The previous Approved Methods will remain approved and will be considered valid when used in conjunction with the respective Intoxilyzer Test Record and Checklist Form 106-I or Form 106-KB.

When the test is conducted according to this method, it is considered as fairly administered and the result obtained is scientifically accepted as accurate.

Margaret A Pearson
1 July 2004

Page 3 of 3

SCREENING DEVICE
INTOXILYZER S-D2

INSTRUMENT FEATURES

The Intoxilyzer S-D2 uses an electro-chemical fuel cell. Two platinum electrodes measure the concentration of alcohol vapor in expired breath. When breath is drawn into the fuel cell, a small voltage is generated in proportion to its breath alcohol concentration. This fuel cell voltage is fed to an electronic amplifier and displayed on a digital display (liquid crystal) calibrated to read the alcohol concentration in grams of alcohol per 210 liters of breath.

The “Set” button serves to prepare the sampling system to accept a breath sample. It also saves on the battery by taking the fuel cell out of the circuit.

The instrument incorporates two breath-sampling lights controlled by an interlinked pressure switch and timer system. Light “A” indicates the subject is blowing hard enough to activate a pressure switch. The “restricted” or “whistling” mouthpieces are required to cause sufficient back-pressure. Light “B” indicates the individual has blown long enough to meet the preset timer requirements. This will ensure that a deep lung air sample has been analyzed.

The “Read “button has two functions. It serves to release the “Set” button and to activate the amplifier and display systems. During a test, it is depressed after the “A” and “B” lights have come on. The “Read” button should be held in until a final value is obtained.

The instrument is simple to operate and may be used as often as required providing a suitable delay allows the detector to clear the alcohol. If the previous sample is clear of alcohol, a new sample may be taken immediately. Normally, a second sample may be taken within two minutes. Following very high alcohol concentrations, the unit will require a few more minutes. Taking another breath sample, before the S-D2 is allowed to clear the alcohol, may result in an additive or higher than expected result.

INTOXILYZER S-D2

<u>Instrument Features</u>:

1. Mouthpiece
2. Sampling Port
3. “Set” Button
4. “Read” Button
5. Alcohol Level Display
6. Calibration Control (on Side)
7. Breath Sampling Lights
8. Battery (on Bottom)
9. Leather or Soft Case

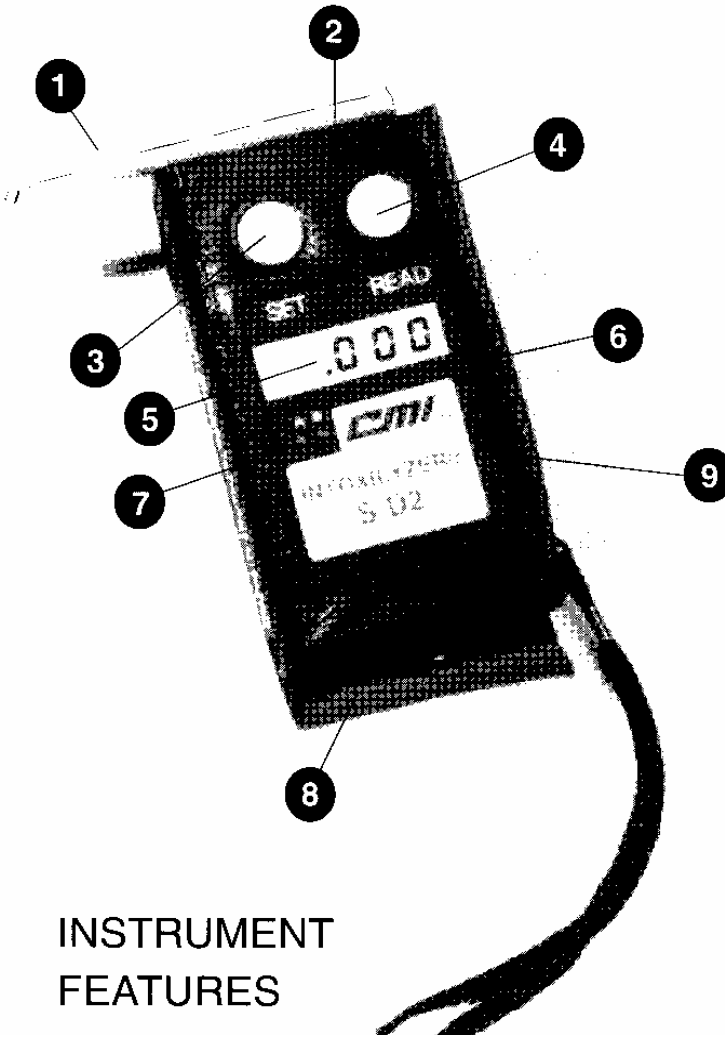

Figure 1

DESCRIPTION OF ANALYSIS

The S-D2 contains a fuel cell sensor backed by a spring-loaded diaphragm and a sampling valve. When the valve is released, the diaphragm draws a one ml (cc) sample from the breath into the fuel cell for analysis. Alcohol in the cell reacts to form acetic acid. A signal is generated in the fuel cell proportional to alcohol concentration in the breath sample. An amplifier powered by the nine-volt alkaline battery causes the result of the analysis to be displayed as alcohol concentration (0.###) when the "Read" button is depressed and held in.

The "Read" button operates in two stages. First, it releases the valve thus taking a sample. Secondly, when fully depressed, it switches the instrument "on" electrically.

When the "Set" button is depressed and locked in, the electric system is off. The "Set" button should be locked in to speed up the chemical reaction and maximize the "burn-off" rate.

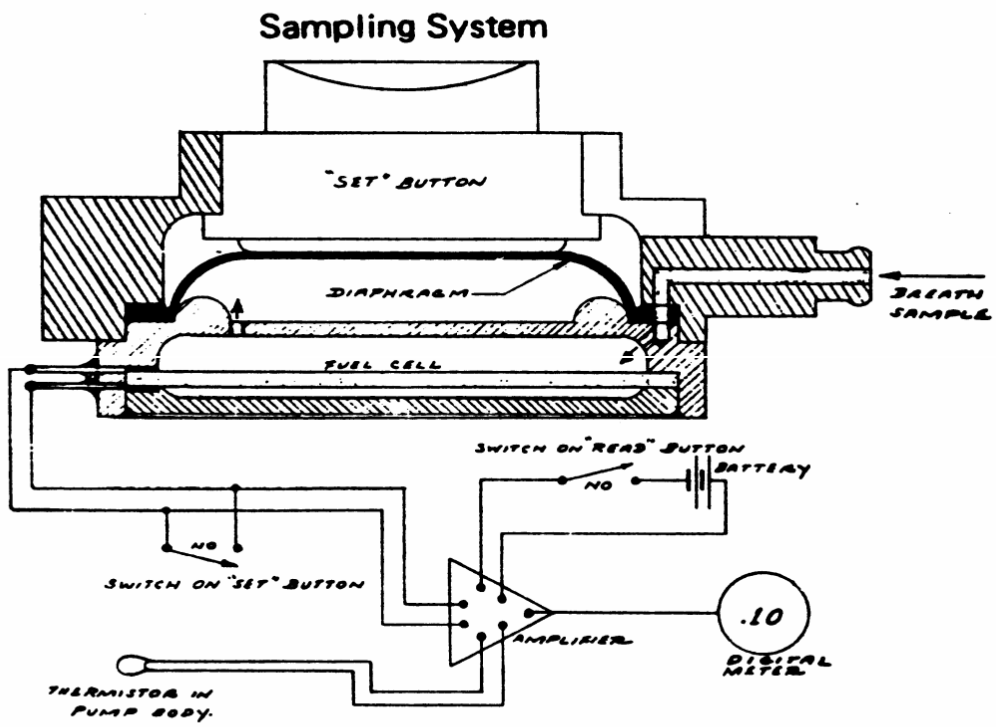

Figure 2

EXPLANATION OF THE FUEL CELL CHEMISTRY

Alcohol Breath Sample + Fuel Cell ? Acetic Acid + Electrons* ? $CO_2 + H_2O + O_2$
Fast Reaction Slow Reaction

REPEATED SAMPLING IN SHORT TIME	EFFECT
Acetic acid buildup	Reaction slow up (loss of sensitivity)
Only with passage of time reaction occurs	The fuel cell regains sensitivity

Calibration should be accomplished in no more than two tries and when acetic acid has not built up. To check for acetic acid build-up, depress the "READ" button. The display should read ".000 AC." Figure 3 demonstrates the build up and elimination of Acetic Acid and Electrons.

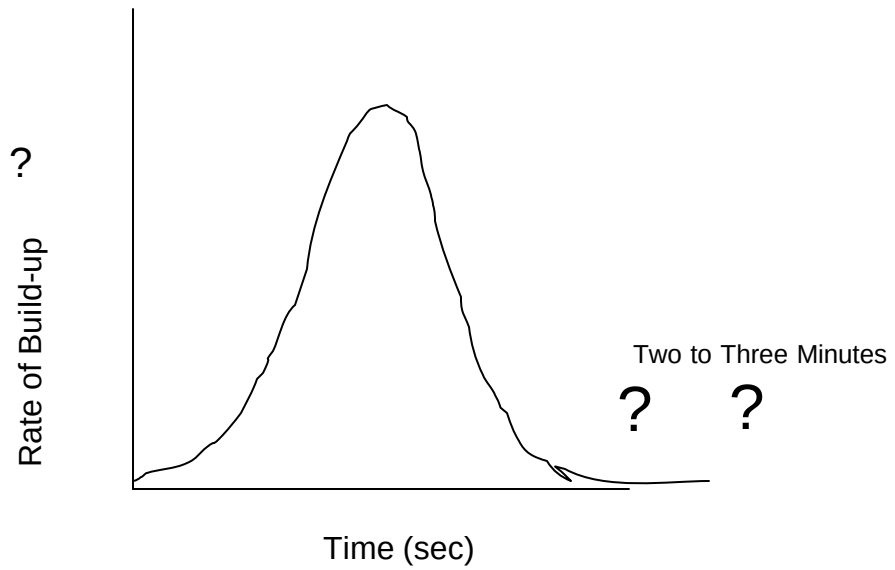

Rate of Electron Build-Up (Figure 3)

OPERATING PROCEDURE

The operator should observe the subject three minutes (prior to a screening device test) with nothing in the subject's mouth. This will help prevent raw alcohol and smoke from damaging the detector. This time period will allow for most of the mouth alcohol to be absorbed. This deviates from the S-D2 manual instructions.

If the subject is required to take an evidentiary test on the Intoxilyzer 5000, a full 20-minute deprivation period would be necessary. A 20-minute waiting period is only necessary for an evidentiary test (on the Intoxilyzer 5000.)

1. Check the operating temperature (10-40° C) on the side of the leather case. If any number is visible, proceed to step number 2. If a number is not visible, place the Intoxilyzer S-D2 in a warm place for approximately two minutes and recheck.

2. Depress and lock the "Set" button. After approximately two minutes, depress the "Read" button. When the display reads less than .002, proceed with the test. If not, repeat as many times as necessary.

3. Attach a clean mouthpiece. Hold the instrument upside down to avoid introducing liquid into the sampling system.

4. Take a sample. Instruct the subject to blow steadily into the mouthpiece for as long as possible or until told to stop. He must blow strongly enough to bring on light "A" and long enough to bring on light "B." When light "B" illuminates, press the "READ" button. Tell the subject to stop blowing. If light "B" does not illuminate, the subject has not provided a sufficient sample.

5. Observe the reading. To obtain an indication of the subject=s blood alcohol concentration, continue to hold down the "READ" button and observe the display as it rises to a maximum reading.

6. Discard the mouthpiece and depress the "SET" button.

Interpretation of Results:

The highest BAC displayed is the alcohol concentration of the subject. The Intoxilyzer S-D2, when properly calibrated, will read within ±10 percent of the true value. This value is considered pre-evidentiary for the purposes of DUI, BUI, and HUI. Therefore, a blood, breath (Intoxilyzer 5000), or urine test will be necessary.

Diabetic Reaction (Acetone):

This instrument will not detect or react with acetone from the subject. Therefore, it does not interfere with the alcohol concentration.

Mouth Alcohol:

Keep in mind that mouth alcohol may give a false high level. Most of the mouth alcohol will be gone in three minutes.

Calibration of the S-D2:

A simulator is used to **calibrate** screening devices. **The current solution alcohol concentration is "0.11" g per 210 L vapor. The S-D2 is calibrated to ".110."**

WARNING

To avoid filling the sample chamber with water, be careful not to connect the input port of the simulator to the Intoxilyzer S-D2.

Model Mark IIA Simulator:

The Mark IIA Simulators are used for calibrating the S-D2 instruments. The outlet tube is connected to the mouthpiece on the S-D2.

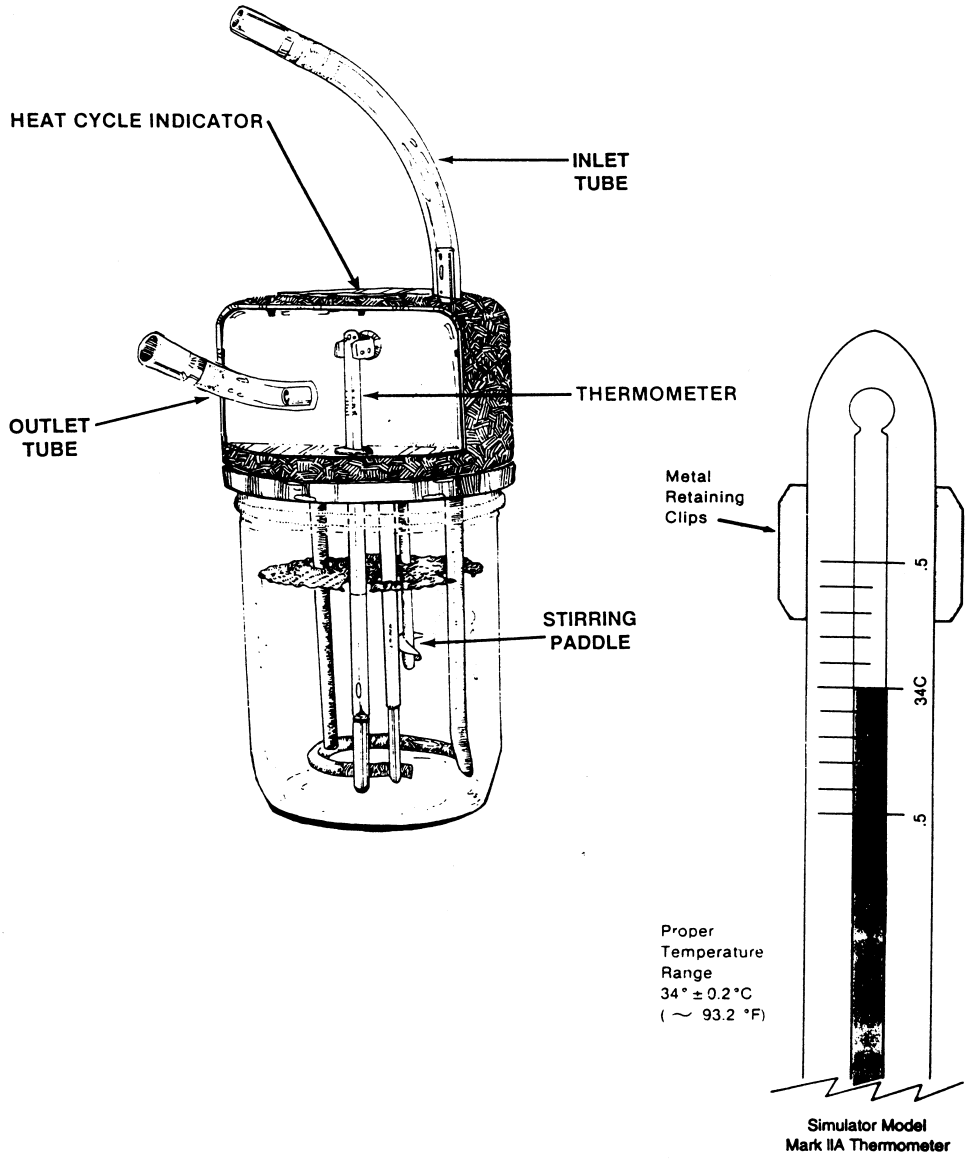

Figure 4

Calibration:

Using the simulator solution sent by the Toxicology Section, plug in the simulator and allow the simulator to reach the correct temperature (34.0°± 0.2° C).

Check the simulator for proper operation and leaks.

If the calibration screw is not accessible through the leather case, remove the wrist strap and take the Intoxilyzer S-D2 out of the leather carrying case.

Turn the calibration screw a half turn counterclockwise.

Depress the "Read" button for ten seconds and note the alcohol concentration of less than .002 AC. If not, depress the "Set" button. Wait approximately two minutes. Repeat this step until the AC is less than .002.

Attach a mouthpiece and connect the simulator and Intoxilyzer S-D2 mouthpiece together. Blow simulator solution through the mouthpiece and observe the "A" and "B" lights. Blow the solution hard enough to illuminate the "A" light and long enough to illuminate the "B" light. When the "B" light illuminates, depress the "Read" button and continue to hold it in.

Observe the display. Immediately after the introduction of a good sample, the numbers on the display should increase rapidly. Within a few seconds, the numbers will slow and eventually stop increasing. Approximately three or four seconds later, the numbers will begin to decrease. Prior to this decrease, the calibration screw must be adjusted so the instrument displays the expected alcohol concentration (0.110). If the displayed value is too high, the screw should be turned clockwise. If too low, the screw should be turned counterclockwise. If the displayed numbers begin to decrease before this adjustment is made, calibration should be attempted again by repeating steps four through seven.

Return the S-D2 to the carrying case and attach the wrist strap, if necessary.

Maintenance:

It is recommended that the unit be checked for calibration, once a month, and recalibrated if necessary. Operators should run a calibration check to assure accuracy in testing. To do this, a test of a new simulator standard should be run. If the value obtained is more than five percent higher or lower, the unit should be recalibrated using the above procedure.

Example: A simulator solution of 0.11 percent should read from 0.105 - 0.115 AC.

If the Intoxilyzer S-D2 shows any of the following, you should contact the Toxicology Section or a Field Inspector for troubleshooting and repair (please enclose a note detailing the problem):

1. Fails to zero properly (.000 to .001 AC).

2. Fails to recalibrate.

3. Fails to accept a sufficient sample.

4. Fails to illuminate the display, light “A” or light “B.”

Battery:

Other than recalibrating the device, changing the battery is the only maintenance that should be done by chemical test operators.

If while depressing the “Read” button, “L0.00" is displayed, the battery voltage is low and must be replaced. This will occur when the voltage falls to 7± 0.5 volts. The operator should replace the battery with a nine-volt Alkaline battery. **Do not use rechargeable batteries**. After replacing the battery, the Intoxilyzer S-D2 should be checked and recalibrated, if necessary.

Mouthpieces:

The S-D2 requires “restricted” mouthpieces. They may be ordered over the phone from the Toxicology Lab. Be sure to mention that you need “restricted” mouthpieces for the Intoxilyzer S-D2.

Temperature:

The S-D2 should be kept out of direct sunlight and at room temperature. Extreme heat inside motor vehicles may damage the instrument. Cold temperatures may require warming the S-D2 prior to use. As a general rule, use the S-D2 in a temperature controlled vehicle.

Ref.: Lion Alcolmeter™ S-D2 Operating Instruction Manual, Lion Laboratories, P.C.; Barry, South Glamorgan; Wales, United Kingdom; 1995; and the Intoxilyzer S-D2, Service Manual, Breath Alcohol Testing Instrument; CMI, Inc., Owensboro, KY, 1996.

SUMMARY

Purpose:

- Estimates the breath alcohol concentration
- Observation period
  - Three minutes

Certification:

- Chemical Test Operators, Devices, and Instruments
  - NDCC 39-20-07 and 39-20-14
- Protect Instrument:
  - DO NOT blow smoke into devices
  - DO NOT breathe raw alcohol into devices
  - Avoid heat and direct sunlight in vehicles

Intoxilyzer S-D2:

- Read the highest value obtained on the breath
- Contains fuel cell detector
- Will detect other chemicals in the breath:
  - Methyl alcohol
  - Isopropyl alcohol
- Will not detect acetone
- Is temperature sensitive
  - Operating range: 10-40° C (50-104° F) (Note: The instrument will not work **properly** outside this temperature range.)

Calibration:

- Calibrate with a Standard Simulator Solution
  - 0.11 g per 210 L (±5 percent)
  - Range 0.105 to 0.115 g/210 L (checking calibration only)
  - Unit should be checked once a month and calibrated as needed to ensure proper estimation of breath alcohol concentration

Form 105 Completed at Location With Screening Devices Only:

OFFICE OF ATTORNEY GENERAL
2635 East Main Avenue
P.O. Box 937
Bismarck, North Dakota 58502-0937
SFN 50492 (7/03)

TEL 701-328-6159
TEL 800-296-2054
FAX 701-328-6145

STANDARD ETHYL ALCOHOL SOLUTION REPORT FORM

(Only a Chemical Test Operator may change the solution and complete this form.)

Name: Margaret Pearson

Location: Toxicology Lab

Simulator Serial Number: DR 3850

Simulator Temperature: 34.0°C

Used for screening devices only X yes ___no

(If used for screening devices only, sign & date below)

Intoxilyzer Instrument Serial Number: _____

Diagnostic check complete? ___Yes ___No

Instrument Test Results (report to 3 digits, example, 0.107%)

Test 1: 0._____%

Test 2: 0._____% (ATTACH TEST RECORD)

Test 3: 0._____%

Margaret A. Pearson
Signature

8/15/03
Date

STANDARD SOLUTION NUMBER: **493**
Form 105
Toxicology Laboratory
Crime Laboratory Division

APPROVED METHOD FOR OPERATING THE INTOXILYZER S-D2
LETTER OF CERTIFICATION

NORTH DAKOTA STATE DEPARTMENT OF HEALTH
2635 East Main Avenue
P.O. Box 937
Bismarck, North Dakota 58502-0937

FAX 701-328-6145

State of North Dakota)
)ss
County of Burleigh)

I, Margaret A. Pearson, do hereby certify that I am the duly-appointed State Toxicologist for the State of North Dakota and the official custodian of the records and files of the office thereof, that I have carefully compared the **APPROVED METHOD FOR OPERATING THE INTOXILYZER S-D2 (JUNE 15, 2003)** hereto attached with the respective original as the same appears of record on file in the Toxicology Laboratory in the County of Burleigh, North Dakota, and find the same to be a true and correct copy thereof and of the whole thereof. In witness whereof I have set my hand at the city of Bismarck, in said county this **15TH** day of **JUNE**, **2003**.

Margaret A. Pearson, State Toxicologist

State of North Dakota)
)ss
County of Burleigh)

On this **15TH** day of **JUNE, 2003**, before me personally appeared Margaret A. Pearson, known to me to be the State Toxicologist for the State of North Dakota, acknowledged to me that she has executed the same.

Subscribed to and sworn before me this **15TH** day of **JUNE, 2003**.

Cindy Leingang, Notary Public, State of North Dakota
My Commission Expires January 11, 2005

CINDY LEINGANG
Notary Public, STATE OF NORTH DAKOTA
My Commission Expires JANUARY 11, 2005

Chemistry	Forensic Science	Toxicology	Medical Examiner
701-328-6140	701-328-6158	701-328-6141	701-328-6138

APPROVED METHOD FOR OPERATING THE INTOXILYZER S-D2

NORTH DAKOTA STATE DEPARTMENT OF HEALTH
2635 East Main Avenue
P.O. Box 937
Bismarck, North Dakota 58502-0937

FAX 701-328-6145

June 15, 2003

SCREENING TESTS

The following device and method are approved to conduct onsite screening tests under sections 20.1-15-15 and 39-20-14 of the North Dakota Century Code for the purpose of estimating the alcohol content of a person's blood.

DEVICE

The INTOXILYZER S-D2, manufactured by Lion Laboratories, P.C.; Barry, South Glamorgan, Wales, United Kingdom; is approved for the administration of onsite screening tests to estimate the alcohol content of a person's blood.

APPROVED METHOD FOR OPERATING THE INTOXILYZER S-D2

1. Ascertain that the subject has nothing to eat, drink, or smoke within three minutes prior to the subject providing a breath sample.

2. Check the operating temperature (10-40°C) on the side of the leather case. If any number is visible, proceed to step number 3. If a number is not visible, place the INTOXILYZER S-D2 in a pocket close to your body for approximately two minutes and recheck.

3. Press the 'Read' button for approximately 10 seconds. The display should read less than 0.002. If a higher reading is shown, depress and lock the 'Set' button and place the INTOXILYZER S-D2 in a pocket close to your body for approximately two minutes and repeat step number 3.

4. Depress and lock the 'Set' button.

5. Attach a mouthpiece.

6. Instruct the subject to blow steadily into the mouthpiece for as long as possible or until told to stop. The subject must blow strong enough to bring on Light A and long enough to bring on Light B. When Light B illuminates, press the 'READ' button. Tell the subject to stop blowing. If Light B does not illuminate, the subject has not provided a satisfactory sample. The operator may ask the subject to repeat blowing into the mouthpiece.

7. Continue to hold down the 'READ' button and observe the display. The maximum reading is the correct estimate of the subject's alcohol concentration.

8. Discard the mouthpiece and depress the 'SET' button.

A test administered according to the operating procedure or the insert in the leather case of the INTOXILYZER S-D2 device, shall be deemed to be in accordance with the Approved Method.

Margaret A Bennett
15 June 2003

Chemistry 701-328-6140 | Forensic Science 701-328-6158 | Toxicology 701-328-6141 | Medical Examiner 701-328-6138

THE METRIC SYSTEM

It is the objective of this chapter to familiarize operators with the metric system. Nomenclature and scientific measures pertinent to the field of breath testing are discussed.

HISTORY OF THE METRIC SYSTEM

The metric system was developed in France near the end of the Eighteenth Century. It is used in scientific work throughout the world. In the metric system, the measurement of length is based on the **METER,** the unit of volume is the **LITER**, and the unit of mass or weight is the **GRAM**.

UNDERSTANDING THE METRIC SYSTEM

The decimal nature of the metric system is its most distinguishing characteristic. The metric system is referred to as a decimal system because it is based on powers of ten. This means that as units increase in size, each unit is ten times larger than the preceding unit; conversely, as units decrease in size each unit is ten times smaller than the previous unit.

To change from one unit to another in the metric system, one merely moves the decimal point. When changing from larger units to smaller units, one moves the decimal point the necessary number of places to the right. When changing from smaller units to larger units, one moves the decimal point the necessary number of places to the left.

RELATIONSIP OF MEASURES IN THE METRIC SYSTEM

As was previously stated, all units in the metric system are derived from the meter. A cube that is ten centi**meters** on each side, as shown in the following figure, filled with water at 4 °C, defines the liter (L) and the kilogram (km). The volume of water held by the cube is equal to one liter. Since the cube has sides of 10 cm each, one liter is equal to 1,000 cubic centimeters (10 cm x10 cm x 10 cm). One liter = 1,000 milliliters (ml); therefore, one milliliter must equal one cubic centimeter (cm^3 or cc).

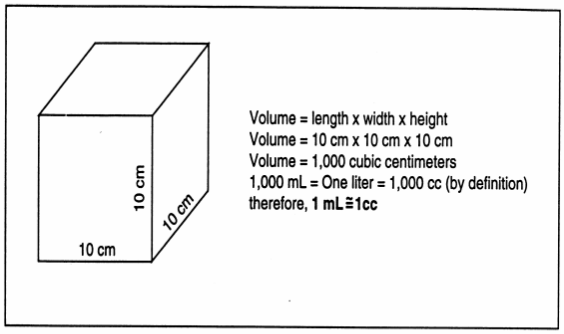

THE RELATIONSHIP OF LENGTH, VOLUME, AND MASS (WEIGHT)

Figure 1

The weight of this 10 cm cube filled with water is equal to one kilogram. Since one kilogram is equal to 1,000 grams, one cc of water weighs one gram.

UNITS OF MEASURE

By addition of Latin prefixes to the basic units (meter, liter, and gram), the names of the units of division (tenths, hundredths, thousandths, etc.) are formed. For example, “deci” means one-tenth (0.1), “centi” means one-hundredth (0.01), and “milli” means one-thousandths (0.001). By adding Greek prefixes to the basic units, the names of units of multiplication are formed. For example, “deka” means 10, “hecto” means 100, and “kilo” means 1,000.

For the three basic units of metric measure (meter, liter, and gram), refer to Tables 1, 2, and 3.

Table 1- The Meter:

Unit	Abbreviation	Size	One Meter is Equal to:
Kilometer	km	1,000 meters	0.001 km
Hectometer	hm	100 meters	0.01 hm
Decameter	dam	10 meters	0.1 dam
Meter	**m**	**1 meter**	**1 m**
Decimeter	dm	0.1 meter	10 dm
Centimeter	cm	0.01 meter	100 cm
Millimeter	mm	0.001 meter	1,000 mm

Table 2 - The Liter:

Unit	Abbreviation	Size	One Liter is Equal to:
Kiloliter	k.	1,000 Liters	0.001 k.
Hectoliter	hl	100 Liters	0.01 hl
Dekaliter	dal	10 Liters	0.1 dal
Liter	**L**	**1 Liter**	**1 L**
Deciliter	dl	0.1 Liter	10 dl
Centiliter	cl.	0.01 Liter	100 cl.
Milliliter	ml	0.001 Liter	1,000 ml

Table 3 - The Gram:

Unit	Abbreviation	Size	One Gram is Equal to:
Kilogram	kg	1,000 grams	0.001 kg
Hectogram	hg	100 grams	0.01 hg
Dekagram	dag	10 grams	0.1 dag
Gram	**g**	**1 gram**	**1 g**
Decigram	dg	0.1 gram	10 dg
Centigram	cg	0.01 gram	100 cg
Milligram	Mg	0.001 gram	1,000 mg

Measure of Length:

The **meter** is used to define the measure of length in the metric system. The meter (m) is called the base unit of length. It is from this length measurement (the meter) that the units of volume and mass or weight are derived. One common conversion from the English measurement system to the metric system is 39.37 inches equals 1 meter. For other common comparisons of length, see the figure below:

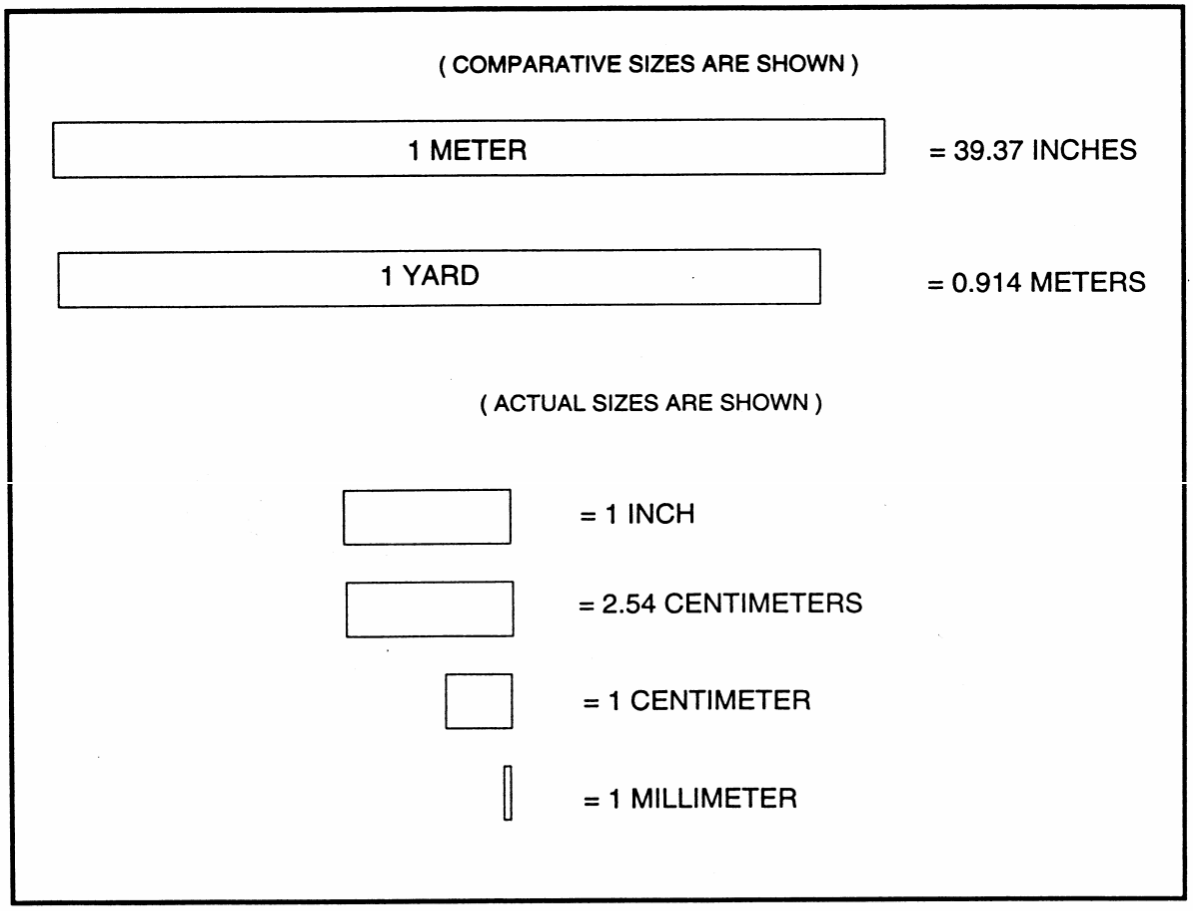

COMPARISONS OF LENGTH

Figure 2

Measure of Volume:

The area of space an object takes up is called the volume or its cubic contents. The volume of a rectangular box is found from its inside dimensions. The result is called its capacity of cubic contents. The **liter** is used to measure volume. A liter (L) is equivalent to 1000 cubic centimeters (cm^3). A cubic centimeter is the same as a milliliter (ml) for all practical purposes. For some common comparisons of volume, see the figure below:

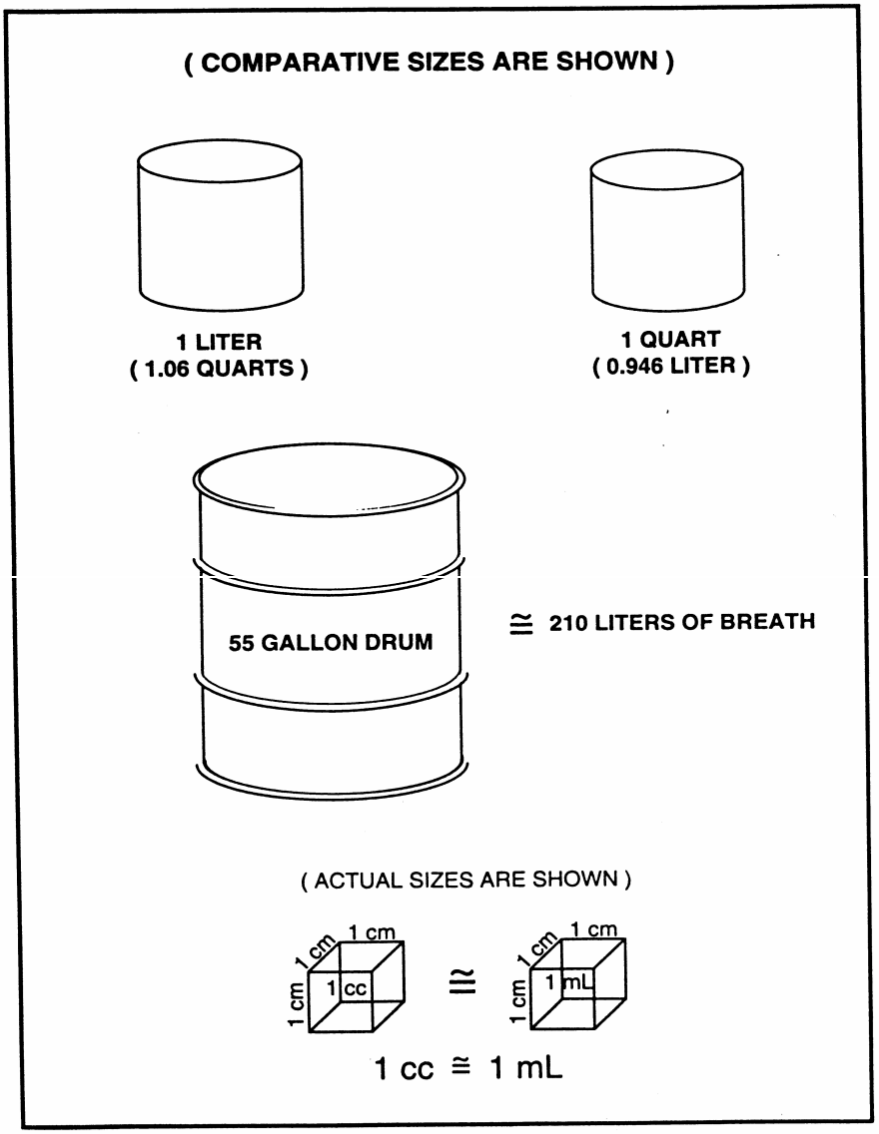

COMPARISONS OF VOLUME

Figure 3

Measure of Mass (Weight):

The **gram** is the mass of one cubic centimeter (cm^3) of distilled water at a temperature of 4°C at sea level. For some common comparisons of mass, see the figure 4 below:

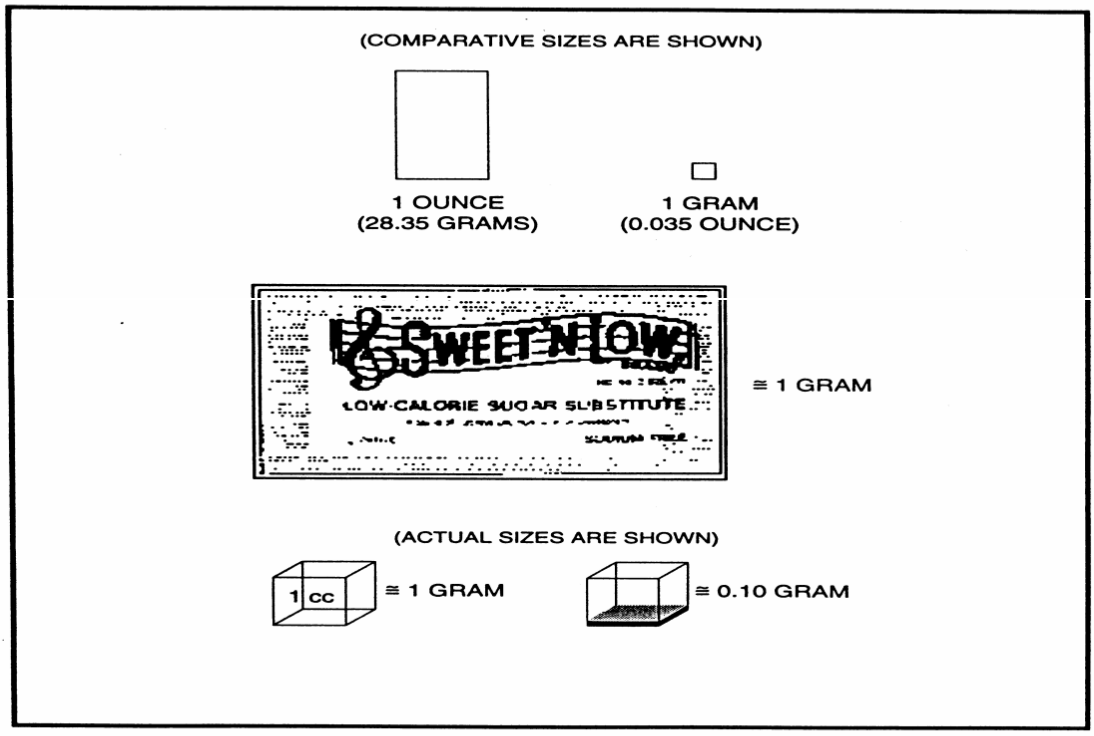

COMPARISONS OF MASS (WEIGHT)

Figure 4

TEMPERATURE

The Fahrenheit (°F) scale is probably the most familiar temperature scale. On this scale, the freezing and boiling points of water are 180 degrees apart. Water freezes at 32°F, and boils at 212°F. (See the figure 5 below.)

Scientific measurements of temperature are generally made by using the Celsius (°C) scale. This may also be referred to as the Centigrade scale. On this scale, the freezing and boiling points of water are 100 degrees apart. Water freezes at 0°C, and it boils at 100°C. Since there are 100 degrees between the freezing and boiling points of water on this scale, one can see that each degree Celsius is 1.8 times as large as each degree Fahrenheit. (See the figure 5 below.)

The standard solution is heated to 34.0 °C ± 0.2°C (33.8 to 34.2).

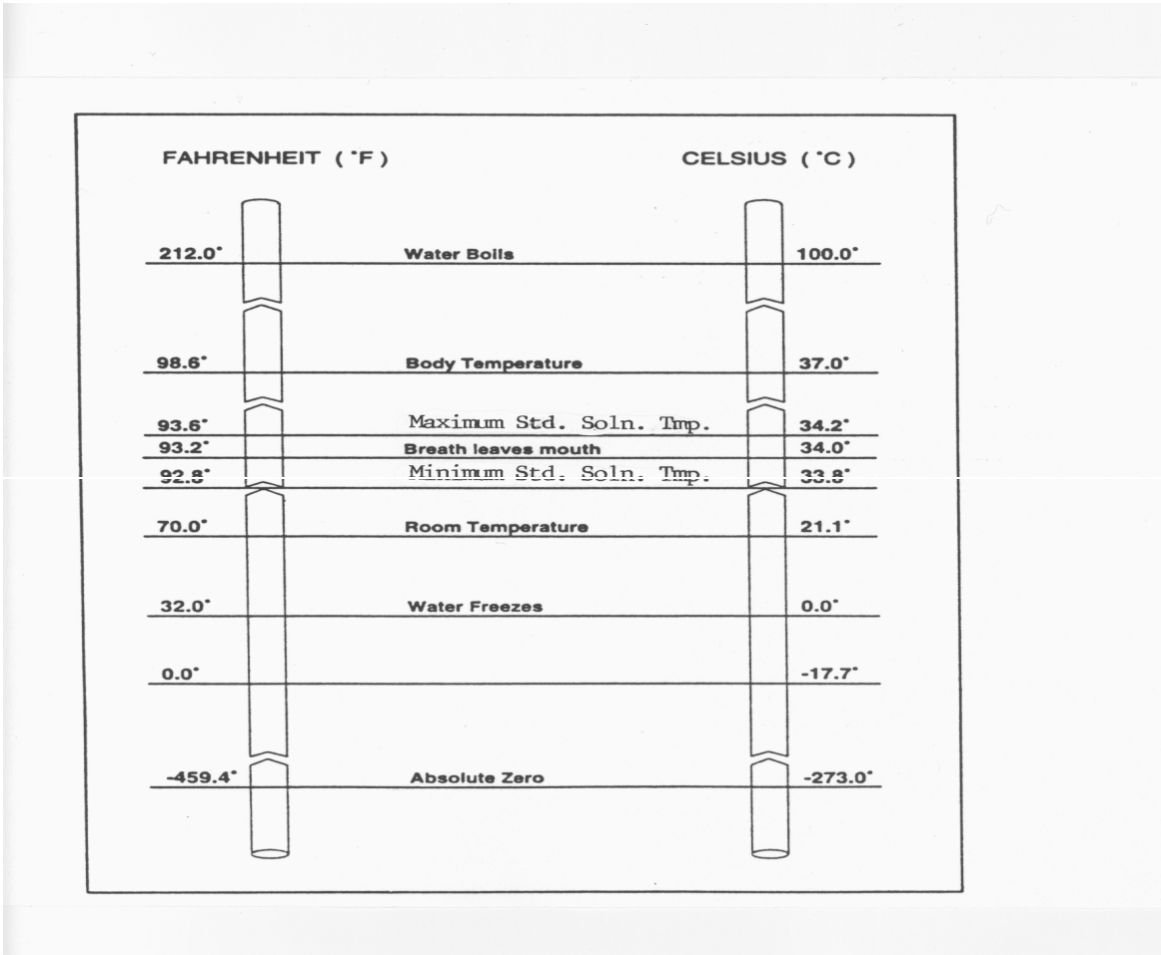

Figure 5

DENSITY

Density is mass per unit volume of a substance or solution. This is expressed as $d = m/V$; where d = density, m = mass, and V = volume. The most generally used unit is grams per milliliter. Density is an important characteristic property of a material. Water, for example, has a density of 1.00 g/ml at 4°C.

SPECIFIC GRAVITY

Specific Gravity is equal to the mass of a substance divided by the mass of an equal volume of water at 4°C. Since the density of water at 4°C is 1.00 g/ml, density and specific gravity are considered the same. Alcohol has the specific gravity of 0.79 at 20°C.

PERCENT

Percent is the ratio of parts per 100. The percentage mark (%) denotes this ratio. The average percent alcohol in beer is 4% (v/v). This indicates four ml of alcohol in 100 ml of water.

PROOF

Proof was defined by the ability for a flash to ignite gunpowder and alcohol of sufficient strength or concentration. This concentration was determined to be 50% (v/v) alcohol in water or 100 proofs. This means 200 proof alcohol is the same as 100% (v/v) alcohol. Likewise, liquor that is 86 proof is 43% (v/v).

ALCOHOL CONCENTRATION

Alcohol concentration of various biological specimens is defined in the NDCC as a mixed ratio of weight per unit volume.

Blood - g alcohol per 100 ml blood or more commonly %
Breath - g alcohol per 210 L deep lung air
Urine - g alcohol per 67 ml urine

Figure 6

COMMON CONVERSIONS

1 meter	=	39.37 inches
2.54 centimeters	=	1 inch
1 liter	=	1.06 quarts
30 milliliters	=	1 fluid ounce
454 grams	=	1 pound
1 kilogram	=	2.2 pounds

(°C x 1.8) + 32° = °F or (°C x 9/5) + 32° = °F	(°F – 32) / 1.8 = °C or (°F - 32) x 5/9 = °C

Figure 7

THE SIMULATOR AND STANDARD SOLUTION

The simulator is a specially designed constant temperature, wet-bath instrument devised for the purpose of providing a standard alcohol breath vapor. When attached to the Intoxilyzer 5000, it allows the operator to “check the calibration” of the Intoxilyzer 5000. If the alcohol concentration of the Standard Solution is in the allowable range, it indicates that the Intoxilyzer 5000 is properly calibrated.

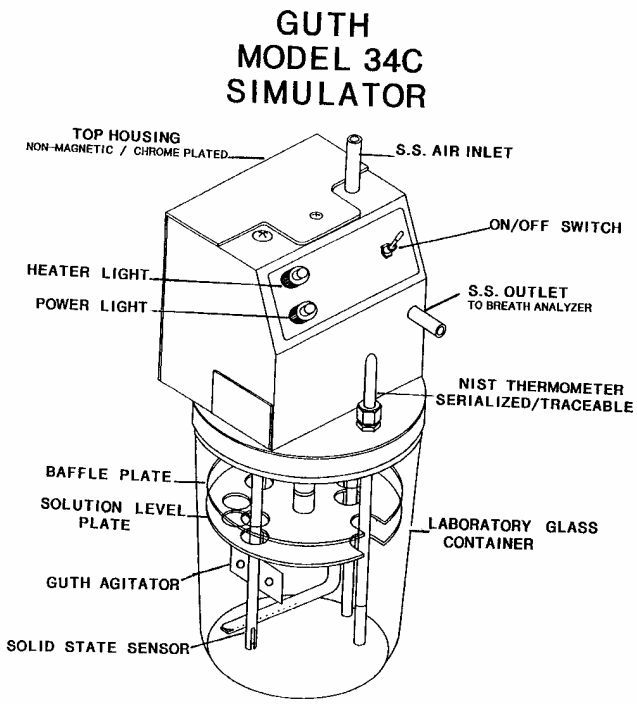

Figure 1

During a calibration check, the instrument's pump draws air through the simulator; therefore, a tightly-sealed simulator is essential. After filling the simulator jar with a standard alcohol solution, check for air leaks by blowing in the simulator while plugging the exit port. You should note a large difference in pressure and minimal bubbles in the simulator solution.

The simulator should be warmed-up to operating temperature. The operator should be careful to check the solution temperature prior to starting the test. **When changing the solution, allow a 15-20 minutes warm-up period.** Swirling the simulator solution and checking the temperature will assure the vapor above the solution contains the proper amount of alcohol. The standard solution vapor is re-circulated between the simulator and the Intoxilyzer 5000**.** By having a closed system, the alcohol concentration remains constant.

Guth Simulator Model 34C with Heated Hose Attached:

Below is the standard setup for attaching the simulator to the Intoxilyzer 5000 instrument and for performing a calibration check.

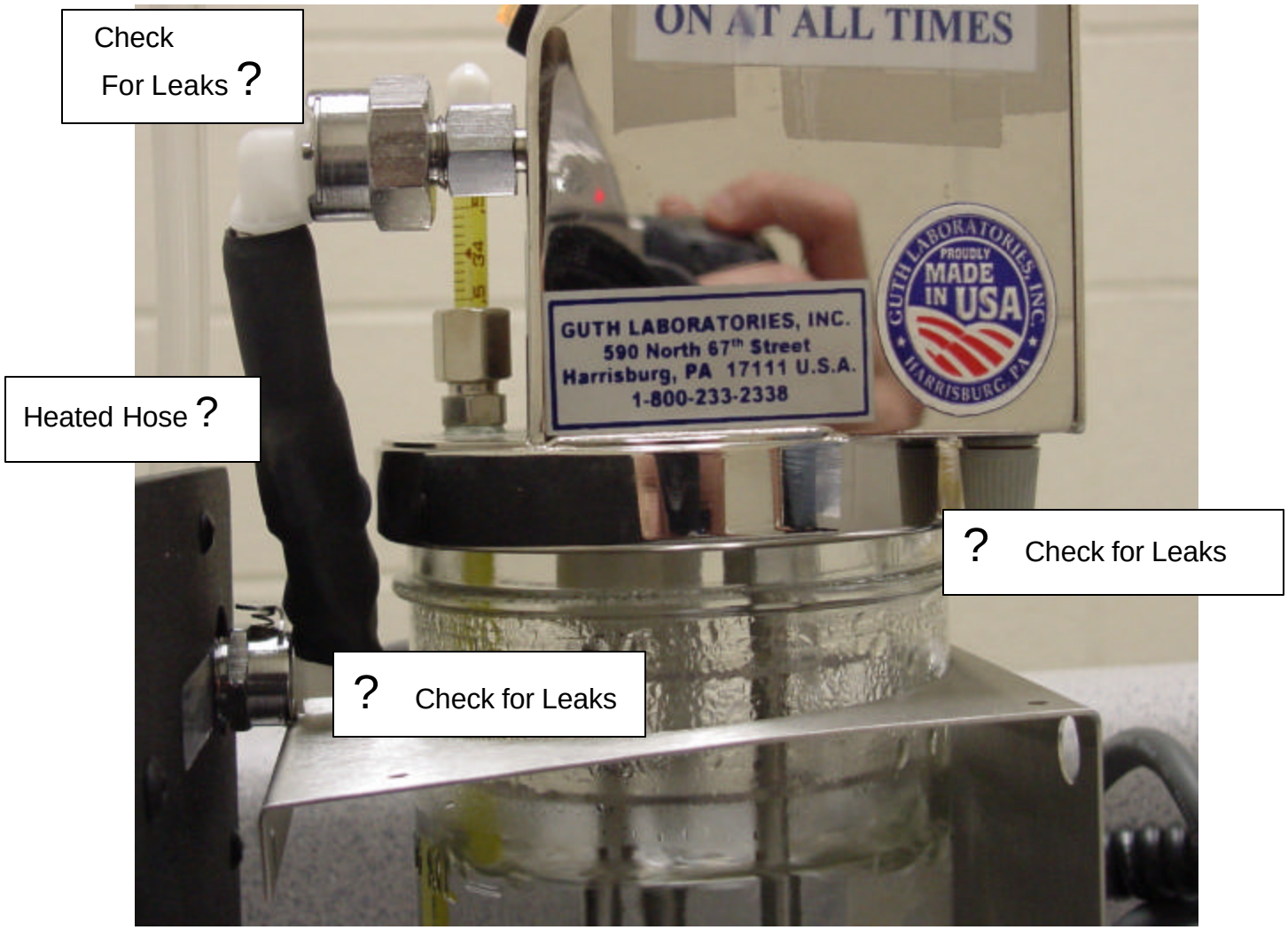

Figure 2

A proper result for the standard test using this solution should be in the range of 0.100- to 0.119 alcohol concentration (g/100 ml of blood or g/210 L of alveolar air).

The Intoxilyzer will print out the value of the standard test in three digits on the Intoxilyzer Test Record (Form 106-KB or KB-EP).

The number of bottles sent to each location will be based on their need. Consequently, it is possible some locations may use the solution with a certain batch number for up to

45 days, while other locations may use standard solutions from different batches in the same month because more than 50 tests were run.

One operator at each agency will be designated the “lead operator” in charge of changing the solution and running a calibration check as part of the quality assurance program. Every operator will be certified to change the solution, should the lead operator be unavailable to do so.

<u>Guth Model 2100 Simulator with Digital Display</u>:

Figure 3

CHANGING SIMULATOR SOLUTION ON THE INTOXILYZER 5000 KB OR KB-EP

Items Needed:

1. A simulator equipped with a quick-disconnect adapter
2. Return clear tubing with a hose connector
3. Simulator solution
4. Form 106-KB
5. Form 105
6. Form 120-I
7. Mouthpieces
8. A clean towel or paper towel

Procedure:

1. Power up the Intoxilyzer 5000 KB or KB-EP.
2. Disconnect the ends of the “Inlet” and “Outlet” tubing from the Intoxilyzer 5000 KB or KB-EP. Unplug the power cord of the simulator from the surge protector or the back panel of the Intoxilyzer.
3. Unscrew the jar from the dome of the simulator. Discard the contents of the solution jar and wipe the jar with a clean, lint-free towel or paper towel.
4. Pour the entire contents of the simulator solution into the jar. The level of the solution should be just below the solution level plate or lower baffle. If necessary, discard some of the solution to adjust the level. Too much solution may cause fluid to enter the Intoxilyzer 5000 and cause “errors.”
5. Screw the dome of the simulator to the jar. Test the simulator for leaks by placing your finger over the outlet of the simulator and blowing into the inlet of the simulator. (If the unit is properly sealed, only a few bubbles should appear in the solution.)
6. Connect the heated ”Inlet” tube to the Intoxilyzer 5000 via the quick disconnect and secure the clear hose from the brass “Outlet” on rear of the Intoxilyzer 5000 to the top of the simulator with a hose clamp.

7. Plug in the simulator power cord and turn the unit “on.”

8. Allow the simulator solution temperature to reach 34.0° ± 0.2°C. **Note:** When changing the solution allow a warm-up period of 20 minutes prior to running the “ACA” test.

9. Press Esc, Esc (within one second) on the keyboard of the Intoxilyzer.

10. When “PASSWORD=” appears on the display, depress “Enter, Enter.”

11. The Menu will appear on the display as “**1 B, C, P, Q**.”

12. Enter “C” followed by the “Enter” key.

13. Insert the Test Record, Form 106-KB (Intoxilyzer 5000 KB only), when requested on the display. Check the appropriate box. (On the KB-EP, type the requested information.) Allow the instrument to cycle through the ACA test. Complete the Form 106-KB and sign the Form 106-KB (or sign both copies of the Form 106-KB-EP printed).

14. Attach the label of the simulator solution to the jar of the simulator or the Intoxilyzer 5000.

15. Complete the Standard Ethyl Alcohol Solution Report Form 105 and the Form 120-I.

16. Return the empty solution bottle and completed Form 105 with one copy of the ACA test.

17. Return all “Toxicology Lab Copies” of the Test Record (Form 106-KB or Form 106-KB-EP) and the yellow copy of the Form 120-I from the previous month. Send them in a separate envelope and mail them to the Toxicology Section. (**Please do not send them in the solution mailing tubes**.)

Note: All boxes not used should be lined through or N/A written in.

A proper result for the Standard Solution 0.11 AC is 0.100 to 0.119 AC, inclusively.

Trouble Shooting the Simulator:

There are some general guidelines for trouble: be sure the vapor of the simulator is up to temperature and be sure there are no leaks in the Intoxilyer 5000 and Guth Simulator vapor recirculation path.

Symptom / Problem	Resolution / Possible Solutions
ACA test shows low AC on new Standard	Check for Leaks and retest the solution. Allow the Simulator to heat up the vapor longer and retest the solution.
ACA test shows low AC during Subject test when the Form 120-I indicates that this solution has had an acceptable AC.	Allow the Simulator to heat up the vapor above the solution and re-run the entire test.
The Simulator does not reach the acceptable temperature of 33.8-34.0°C after 20 minutes of heating.	Call a Field Inspector or the Toxicology Section for help. Get Blood or Urine for this case.
The Simulator temperature is > 34.2^{o}C.	Field Inspectors can help you with Guth 34C Mark IIA Simulators. If the Simulator is a Guth Model 2110 you will need to call the Toxicology Section.
The Simulator Jar is cracked.	Call the Toxicology Section for a replacement.
The thermometer of the Simulator is broken.	Call the Toxicology Section. Mercury is a poisonous metal. We can provide you with the necessary clean-up materials and provide a spare Simulator.
An indicator lamp is burned out.	Call the Toxicology Section for a spare Simulator.
The Simulator will not turn ON.	Call the Toxicology Section for a spare Simulator.
You have to really tighten the Dome and Jar of the Simulator.	Call the Toxicology Section for a new O-ring. If you don't, the Jar will eventually crack.
The tubing is missing or leaking.	Call Toxicology Section for a spare Simulator.

Table 1

Simulator Thermometer in a Guth Simulator Model 34C:

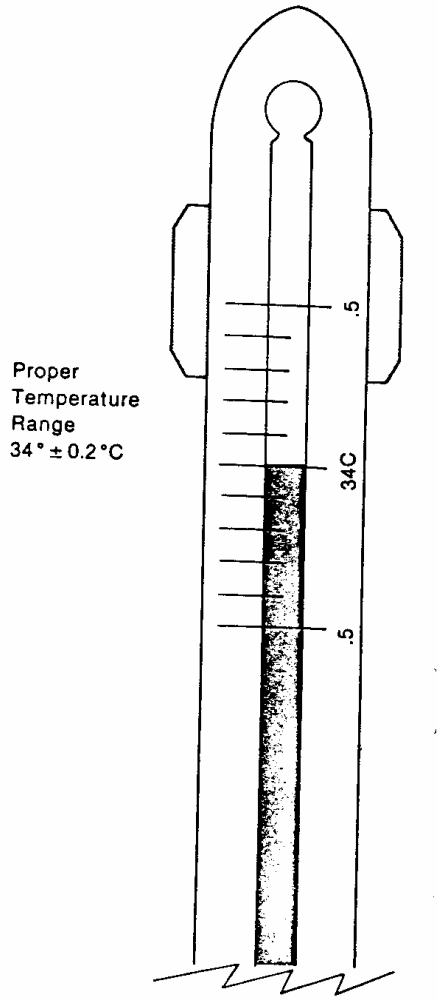

Figure 4

The thermometer in the Guth 34C Simulator has a narrow temperature range of 33.5°–34.5°C. Each line indicates a 0.1°C change in temperature. When the top of the mercury column lies between two lines, the temperature should be read down to the next tenth of a degree Celsius.

The temperature must be entered in the Intoxilyzer 5000 using four keystrokes with in the range 33.8° to 34.2°C, inclusive.

Intoxilyzer Record Form 120-I:

NORTH DAKOTA DEPARTMENT OF HEALTH
OFFICE OF THE STATE TOXICOLOGIST
P.O. BOX 937 - BISMARCK, ND 58502-0937
SFN 50496 (2/02)

INTOXILYZER RECORD

Location: Burleigh Co SO

Standard Solution No.: 402

Intoxilyzer Serial No.: 64-8622

Test #1 0.110 % #2 0.113 % #3 0.112

Simulator Serial No.: M5409

Operator: Jane Jones

Date: 2-20-02

Test Date	Operator's Name (PRINT Last Name, First, MI)	Subject's Name (PRINT Last Name, First, MI)	Subj. Test 1	Std. Test	Subj. Test 2
2-31-02	Olson, Johnny M.	JONES, JAMES, O	0.143	0.109	0.138

Form 120-I **WHITE** - Department Copy **YELLOW** - State Toxicologist Copy

Standard Solution Analytical Report Certification Cover Letter:

State of North Dakota)
)ss
County of Burleigh)

I, Margaret A. Pearson, do hereby certify that I am a duly-appointed State Toxicologist for the State of North Dakota and an official custodian of the records and files of the office thereof, that I have carefully compared the **Standard Solution Analytical Report (Solution No. 506)** hereto attached with the respective original as the same appears of record on file at the Office of Attorney General, Crime Laboratory Division, in the County of Burleigh, North Dakota, and find the same to be a true and correct copy thereof and of the whole thereof. In witness whereof I have set my hand at the city of Bismarck, in said county this:

3rd day of September, 2004.

Margaret A. Pearson

Margaret A. Pearson, State Toxicologist

State of North Dakota)
)ss
County of Burleigh)

On this 3 day of September, 2004, before me personally appeared Margaret A. Pearson, known to me to be a State Toxicologist for the State of North Dakota, acknowledged to me that she has executed the same.

Subscribed to and sworn before me this:

3 day of September, 2004

CINDY LEINGANG
Notary Public, STATE OF NORTH DAKOTA
My Commission Expires JANUARY 11, 2005

Cindy Leingang

Cindy Leingang, Notary Public, State of North Dakota
My Commission Expires January 11, 2005

(SEAL)

Standard Solution Analytical Report:

OFFICE OF ATTORNEY GENERAL
Crime Laboratory Division
2635 East Main Avenue, P.O. Box 937
Bismarck, North Dakota 58502-0937
SFN 50493 (3/04)

TEL 701-328-6159
TEL 800-296-2054
FAX 701-328-6145

Standard Solution Analytical Report

Standard Ethyl Alcohol Solution No. **506** Date Approved 3 September 2004

The solution was tested quantitatively by gas chromatography and Intoxilyzer 5000 analysis.

A proper result for the standard test using this solution would be in the range of 0.100% to 0.119% blood alcohol. (g/100 ml of blood or g/210 L of alveolar air).

The Intoxilyzer will print out the value of the standard test in 3 digits on Intoxilyzer Test Records (Form 106-KB or Form 106-KB-EP).

Having found the ethyl alcohol in the required concentration to simulate the equivalent of 0.11% blood alcohol at 34.0 ± 0.2°C, I the undersigned hereby approve the standard ethyl alcohol solution for use as a standard solution in breath testing.

The number of bottles sent to each location will be based on their need. Consequently, it is possible that some locations may use the solution with a certain batch number for longer than a month or two, while other locations may use standard solutions from different batches in the same month. Each location should use a bottle of solution for up to 50 Intoxilyzer 5000 tests or 45 days, whichever comes first. The use of a bottle of solution for more than 50 Intoxilyzer 5000 tests or 45 days does not adversely impact fair administration of a test as long as a proper result for the standard test is obtained.

Margaret A. Pearson, State Toxicologist

Form 112
Toxicology Laboratory
Crime Laboratory Division

Label for Standard Ethyl Alcohol Solution:

OFFICE OF ATTORNEY GENERAL
Crime Laboratory Division

Standard Ethyl Alcohol Solution

493

Simulates the Equivalent of 0.11% Blood Alcohol (0.11 g/100 ml of Blood or 0.11 g/210 L of Alveolar Air) at 34.0 ± 0.2°C

Acceptable Range: 0.100 - 0.119 g/210L Alveolar Air

July 22, 2003

Margaret Pearson, State Toxicologist

Filling Out Log Book Form 120-I:

NORTH DAKOTA DEPARTMENT OF HEALTH
OFFICE OF THE STATE TOXICOLOGIST
P.O. BOX 937 - BISMARCK, ND 58502-0937

INTOXILYZER RECORD

Location: TOXICOLOGY Lab

Standard Solution No.: 493

Intoxilyzer Serial No.: 68-012562

Test #1 0.113 % #2 0.113 % #3 0.113

Simulator Serial No.: DR 3840

Operator: Margaret Pearson

Date: 7/22/03

Date	Operator's Name	Subject's Name	Subj. Test 1	Std. Test	Subj. Test 2

ACA Test Record Form 106-KB-EP:

Intoxilyzer Test Record And Checklist
State Toxicologist Bismarck, ND 58501

CMI INC
INTOXILYZER - ALCOHOL ANALYZER
ND MODEL 5000 SN 68-012562
07/22/2003 11/01

TEST	AC	TIME
01 ROOM AIR	.000	15:02 CDT
02 STD. SOL.	.113	15:02 CDT
03 ROOM AIR	.000	15:02 CDT
04 STD. SOL.	.113	15:03 CDT
05 ROOM AIR	.000	15:03 CDT
06 STD. SOL.	.113	15:03 CDT
07 ROOM AIR	.000	15:04 CDT

08 SIM TEMP=34.0 LOCATION=TOXL

SIMUL SER NO=DR3840
STD SOL NO=493
COUNTY=08 OPER NO =107501

I followed the approved method and the instructions displayed by the intoxilyzer in conducting this test.

OPERATOR'S SIGNATURE _____

Remarks:

Form 106-KB-EP

ACA – Form 105:

OFFICE OF ATTORNEY GENERAL
2635 East Main Avenue
P.O. Box 937
Bismarck, North Dakota 58502-0937
SFN 50492 (7/03)

TEL 701-328-6159
TEL 800-296-2054
FAX 701-328-6145

STANDARD ETHYL ALCOHOL SOLUTION REPORT FORM

(Only a Chemical Test Operator may change the solution and complete this form.)

Name: Margaret Pearson

Location: Toxicology Lab

Simulator Serial Number: DR 3840

Simulator Temperature: 34.0 °C

Used for screening devices only ___yes X no

(If used for screening devices only, sign & date below)

Intoxilyzer Instrument Serial Number: 68-012562

Diagnostic check complete? X Yes ___No

Instrument Test Results (report to 3 digits, example, 0.107%)

Test 1: 0. 113 %

Test 2: 0. 113 %

Test 3: 0. 113 %

(ATTACH TEST RECORD)

Margaret A Pearson
Signature

7/22/03
Date

STANDARD SOLUTION NUMBER: **493**
Form 105
Toxicology Laboratory
Crime Laboratory Division

Attention — New Policy:

ATTENTION — NEW POLICY

Simulator Solutions

The last sentence of the certification for Standard Ethyl Alcohol Solution Number 506 reads, **"The use of a bottle of solution for more than 50 Intoxilyzer 5000 tests or 45 days does not adversely impact fair administration of a test as long as a proper result for the standard test is obtained."**

If the solution has been used for 50 subject tests, or two (2) pages of the Form 120-I OR the past 45 days, the Intoxilyzer KB or KB-EP should not be used until the solution is changed.

If you use the same solution for 2 pages of Subject tests:

Run an ACA test at the beginning of the first page.
Record the same data on the second page.
The same operator should record the data and sign the Form 120-I on both pages.
INDICATE ON TOP OF PAGE 2 THAT IT IS CONTINUED FROM LAST SHEET.

SAMPLE PAGE 1 ↓

NORTH DAKOTA DEPARTMENT OF HEALTH
OFFICE OF THE STATE TOXICOLOGIST
P.O. BOX 937 - BISMARCK, ND 58502-0937

INTOXILYZER RECORD

Location: Toxicology lab
Intoxilyzer Serial No.: 68 - 111999
Simulator Serial No.: G4999
Standard Solution No.: 492
Test: #1 0.110 % #2 0.111 % #3 0.110
Operator: Maggy Olson
Date: 30 June 2003

Date	Operator's Name	Subject's Name	Subj. Test 1	Std. Test	Subj. Test 2
6-30-03	Samuelson, Jeff	Miller, Doc	.107	.110	.109
6-30-03	Olson, John	Petersen, Ric	.210	.111	.216
7-1-03	Bentzer, Bruce	Thompson, Kris	.163	.110	.172

SAMPLE PAGE 2 ↓

NORTH DAKOTA DEPARTMENT OF HEALTH
OFFICE OF THE STATE TOXICOLOGIST
P.O. BOX 937 - BISMARCK, ND 58502-0937

INTOXILYZER RECORD

Continued from last sheet

Location: Toxicology Lab
Intoxilyzer Serial No.: 68 - 111999
Simulator Serial No.: G4999
Standard Solution No.: 492
Test: #1 0.110 % #2 0.111 % #3 0.110
Operator: Maggy Olson
Date: 30 June 2003

Date	Operator's Name	Subject's Name	Subj. Test 1	Std. Test	Subj. Test 2
7-10-03	Sousa, Sammy	Clinton, Al	.117	.115	.109
7-10-03					

PHARMACOLOGY AND TOXICOLOGY OF ALCOHOL

INTRODUCTION

In order to understand how alcohol affects the drinking driver, we will first need to look at alcohol as a chemical. Understanding the properties of alcohol can help us understand how it is absorbed, distributed throughout and eliminated by the human body. We will then look at how alcohol as a drug affects individuals.

DEFINITION AND CHEMISTRY OF ALCOHOL

Alcohol is the chemical name of a group of compounds having one or more hydroxyl (C-H) groups in the molecule. In common usage, the word refers to grain alcohol (much of it is made from grain), ethyl alcohol, or ethanol. Pure ethyl alcohol is a clear, colorless liquid having a characteristic odor. It is metabolized (primarily in the liver) to acetaldehyde, then to acetic acid, and then on to carbon dioxide and water. Ethanol is relatively safe when consumed in moderate quantities. Its chemical formula is "CH_3CH_2OH."

Wood alcohol (made from the fermentation of wood) is methyl alcohol or methanol. It also is a clear, colorless liquid and cannot normally be differentiated from ethyl alcohol. It is commonly sold as gasoline antifreeze and a component of windshield washer solution. It is often consumed with fatal results, since it is metabolized to formaldehyde, which is extremely toxic. Its chemical formula is "CH_3OH."

Isopropanol, another common alcohol, is a colorless liquid with a very distinct odor. The majority of individuals who intentionally consume isopropanol are "hard core" alcoholics. This alcohol is sold as rubbing alcohol or in "iso-"gasoline antifreeze. The danger in drinking isopropanol is the toxicity of the metabolite acetone. The chemical formula is "$(CH_3)_2CHOH$."

Ethylene glycol, the primary ingredient of many antifreeze solutions, is an alcohol having two hydroxyl (C-OH) groups. It is mentioned here only as an example of another chemical type of alcohol. It does not usually present a problem to traffic law enforcement. Often poisoning occurs in the small child since containers are often stored in reach. The sweet taste is enticing to youngsters. Toxicologically this compound is of significance since this intoxicant often results in severe poisoning and frequently in death. Its chemical formula is "$HOCH_2CH_2OH$."

Alcohols are organic compounds that are classified as Hydrophilic, meaning they are infinitely soluble in water. This property allows easy absorption and distribution throughout the body.

NON-DISTILLED BEVERAGES

Non-distilled alcoholic beverages are prepared by fermenting fruit juices. The maximum alcohol concentration obtained by the fermentation process is about 14 percent by volume. The yeast is inhibited or killed by higher concentrations of alcohol. If the wine contains more than 14 percent alcohol, it has been fortified (usually in the form of brandy).

Beer is a non-distilled alcoholic beverage made from the starch in grain. The starch is converted to sugar by enzymes in malt. The sugars are then fermented to alcohol with yeast.

DISTILLED BEVERAGES

Distilled spirits are so named because their alcohol content is increased by distillation. Common distilled liquors include gin, whiskey, and vodka. If wines are distilled, the resulting product is a brandy. If specialty-type beers are distilled, whiskey is produced. In the distillation process, the flavoring material, all of the alcohol, and some of the water from the distiller's beer passes over into the distillate that is stored in white oak charred barrels to age it and thus improve the flavor. In this final process of making whiskey, some undesirable flavors are absorbed and solids are extracted by the char.

ENDOGENOUS ALCOHOL

It was believed for many years that alcohol was a normal constituent of the human body. Specific analysis has demonstrated that, if present, the concentration in blood never exceeds 0.003 percent and usually is less than 0.001 percent BAC which is far below a detectable value. It is produced in the GI Tract by microbes acting on sugars.

Note: In this manual, just as in the law, we will often refer to ethanol as alcohol. If we are discussing a different alcohol, we will specify which one.

COMMON ALCOHOLS

Below are a table of common alcohols (methanol, ethanol, isopropanol, and ethylene glycol) and their relative toxicity:

TABLE I
COMMON ALCOHOLS

NAME	FORMULA	BOILING POINT	USES	TOXICITY AND METABOLITES
METHANOL (METHYL ALCOHOL) (WOOD ALCOHOL)	CH_3OH	64.5°C	DENATURANT SOLVENT PAINT REMOVER FUEL	APPROX. 75ML FORMIC ACID
ETHANOL (ETHYL ALCOHOL) (GRAIN ALCOHOL)	CH_3CH_2OH	78.3°C	BEVERAGE SOLVENT MEDICINAL VEHICLE FUEL	APPROX. 400-500ML ACETALDEHYDE (ACETIC ACID)
ISOPROPANOL (ISOPROPYL ALCOHOL) (RUBBING ALCOHOL)	$CH_3CH(OH)CH_3$	82.3°C	DENATURANT ANTISEPTIC	APPROX. 250ML ACETONE
ETHYLENE GLYCOL (ANTIFREEZE)	$CH_2(OH)CH_2(OH)$	198°C	COOLANT SOLVENT	APPROX. 100ML OXALIC ACID

Alcohol, like other drugs, is taken to cause a change of mood, a lapse of memory, or to change the health of one's self. In order for a drug to be effective, it must be absorbed into the body, it must arrive at the target organ, and it must be of sufficient quantity to achieve the desired effect. The body then reacts by eliminating this foreign substance.

The three phases of alcohol in the body are: absorption of alcohol, distribution of alcohol, and elimination of alcohol.

ABSORPTION OF ALCOHOL

Alcohol can enter the body through various routes of administration: oral ingestion, inhalation, injection, absorption, and enema. By far, the most popular means is oral ingestion.

Alcohol may be absorbed into the body by inhalation. If an average person breaths as fast as possible, and breathes as high a concentration of alcohol in the air as he could tolerate, for three to four hours, he might reach a BAC of 0.045 percent. Such a situation is virtually impossible.

Absorption of alcohol through skin is insignificant. If it is absorbed, the rate is lower than the rate of elimination.

Absorption of alcohol starts at the mouth and continues through the intestinal tract. Alcohol in the mouth is absorbed through the lining and into the blood vessels surrounding the mouth. A mouth rinsed with an alcoholic beverage will be alcohol free in 15 minutes or less (most of it is absorbed in 3 to 5 minutes.) This is important when determining a Breath Alcohol Concentration (BAC). The high concentration of an ingested beverage (e.g. beer is four percent) may cause a false high reading on a breath alcohol concentration ranging between 0 and 0.5 percent. In North Dakota, a 20 minute deprivation period is required.

ALCOHOL IN THE HUMAN BODY

The route of alcohol absorption, distribution, and elimination can be traced in the following example:

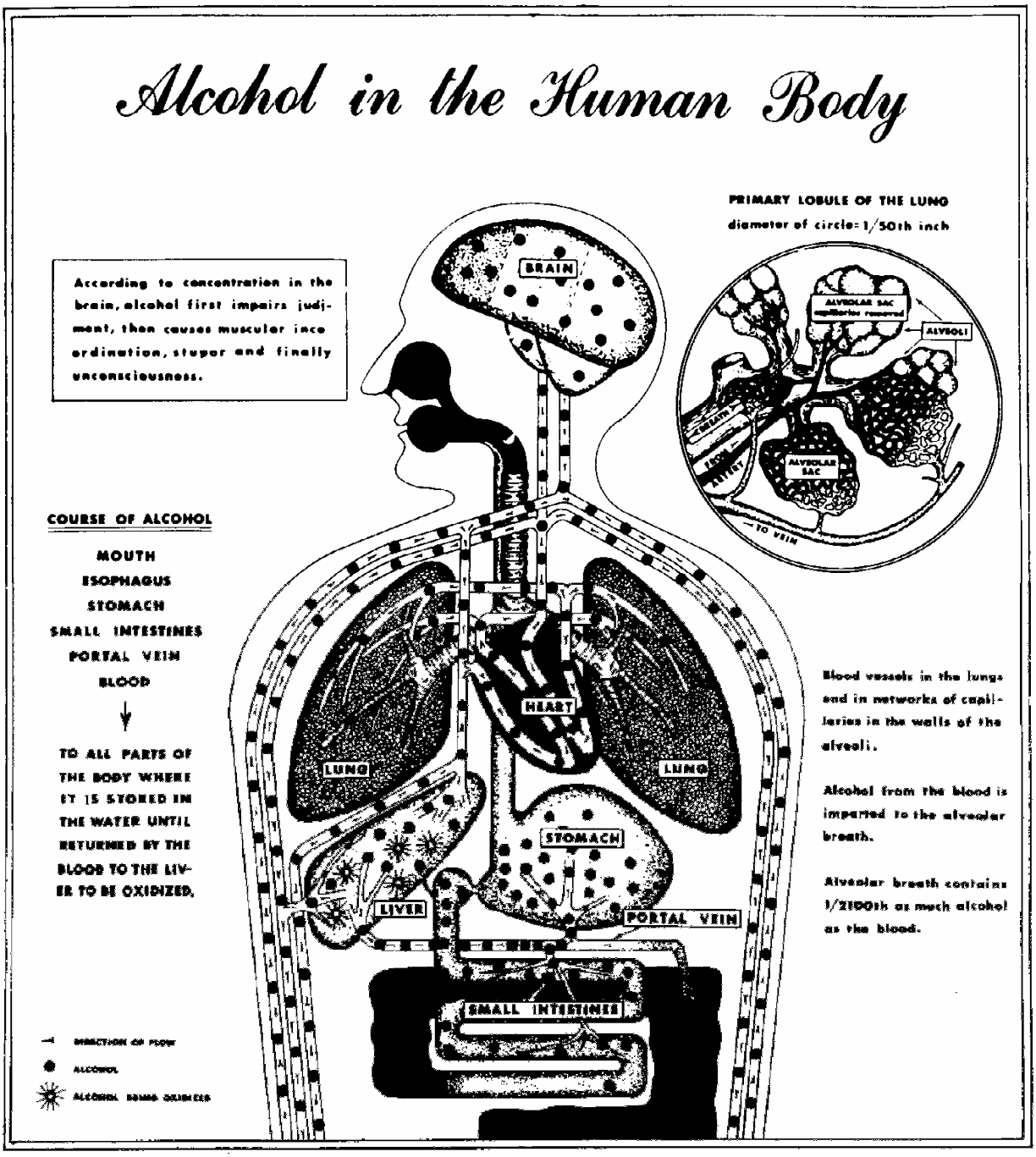

Chart 1

Alcohol can also be absorbed directly from the stomach into the blood. The amount of food in the stomach has the largest impact on the rate of absorption. The more food in the stomach, the longer the digestion time in the stomach occurs, and the longer the absorption takes. The type of food impacts to a lesser degree. Protein-containing foods require more grinding time in the stomach and; therefore, slows the absorption.

The intact stomach and upper intestine together can absorb 100 percent of ingested alcohol. Approximately 15-20 percent of the alcohol absorption occurs in the stomach, while the remaining 80-85 percent virtually occurs in the small intestine. The thin walls of the small intestine, allow passive diffusion of the alcohol into the blood stream.

Alcohol is readily absorbed from the lower bowel. Enemas containing ethanol are given to patients who have ingested the more toxic alcohol—methanol. The ethanol competes with the methanol for metabolism and allows the methanol to be excreted unchanged.

The urinary bladder is not well supplied with circulating blood; thus alcohol is absorbed from it slowly. Its absorption from this route will not exceed its metabolism.

THE RATE OF ABSORPTION OF ALCOHOL

The rate of absorption of alcohol, from gastrointestinal tract to blood, depends on several factors like the food in the stomach, type of food, the concentration of the drink, the type of mix, and the general health of the subject. Any food in the stomach generally slows the rate of absorption. Both the common beverages, beer with low alcohol content and whiskey with high alcohol content, are generally slow to absorb. Absorption into the body is rapid when the concentration of the drink in the GI Tract is between 15 and 20 percent.

Persons suffering from malnutrition generally have a poor absorption rate. Certain drugs are capable of influencing the rate of absorption. In general, 15 to 20 percent of the ingested alcohol is absorbed from the stomach and 80 to 85 percent from the small intestine. When ingested acutely, on an empty stomach, most of the ethanol (over 50 percent) can be absorbed in 15 to 30 minutes and 90 percent of the alcohol in one hour. Ingestion of alcohol on a full stomach may cause the maximum alcohol concentration (peak alcohol) to be delayed up to 3 or 4 hours.

Alcohol absorption can be described in three phases: the absorption phase, the peak alcohol concentration, and the metabolism phase. The absorption phase occurs as long as alcohol is entering the blood stream faster than the body is eliminating it; the blood concentration is on the increase. The peak occurs when the body is absorbing and eliminating it at the same rate; therefore, causing the blood concentration to remain level. The elimination phase occurs when the body is eliminating the alcohol faster than it is absorbing it; therefore, the blood alcohol concentration is decreasing. (The elimination phase will be discussed in a subsequent section.)

THREE PHASES OF ALCOHOL ABSORPTION

The three phases are referred to as the **Absorption Phase**, **Peak Phase**, and the **Elimination Phase**. They are indicated on the following chart (Figure 1, "Generalized Ethanol Concentration Curve"):

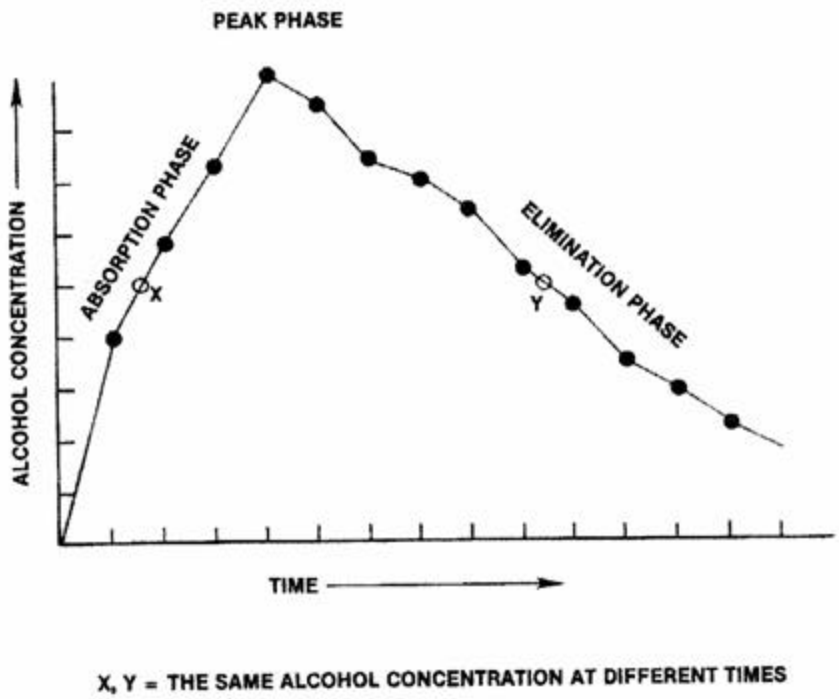

Figure 1: Generalized Alcohol Concentration Curve

Notice the absorption rates and peak alcohol concentrations are most affected by the amount of food in the stomach.

For the reasons stated above, it is not uncommon for two individuals with identical weights, and each one drinking the same number of drinks, to have different blood alcohol levels. Likewise, it is possible for the same person to reach a BAC of 0.10 percent at one time and 0.05 or 0.06 percent at another time having consumed the same amount of alcohol.

Individuals involved in long-term drinking (3 to 4 hours), usually reach peak alcohol concentrations 30 to 90 minutes after consuming the last drink.

DISTRIBUTION OF ALCOHOL IN THE BODY

Alcohol is soluble in water in all proportions. It is only slightly soluble in other body tissues. Therefore, alcohol is distributed throughout the body in proportion to the water content of that fluid or tissue. The tissues having the highest concentration of water have the most alcohol when distribution is complete. Uniform distribution is accomplished within 1 to 2 hours after consumption.

Ethanol is carried throughout the body in the blood. The distribution pathway is shown below in Figure Three, "**The Alcohol Pathway**." The alcohol leaves the stomach and small intestines and travels through the portal vein to the liver. The blood transports it to the right side of the heart. This blood containing alcohol then is transported to the lungs where oxygen enters the blood and some water, carbon dioxide, and alcohol leaves the lungs, through the bronchi and oral cavity as expired breath.

Note: this is the alcohol concentration that is measured to determine driving impairment.

From the lungs, the blood containing alcohol returns to the left side of the heart. The heart then pumps the blood through the carotid artery to the brain. (**Note:** it is the depressant effect on the brain and central nervous system that causes the majority of the impairment. This impairment is proportional to the blood alcohol concentration around the brain.) The blood continues to circulate to other body organs and returns to the liver. The cycle repeats itself until the alcohol is eliminated from the body.

The distribution time of the alcohol, from absorption until the blood alcohol reaches the brain, is approximately 3-4 minutes.

Alcohol Pathway (Figure 2):

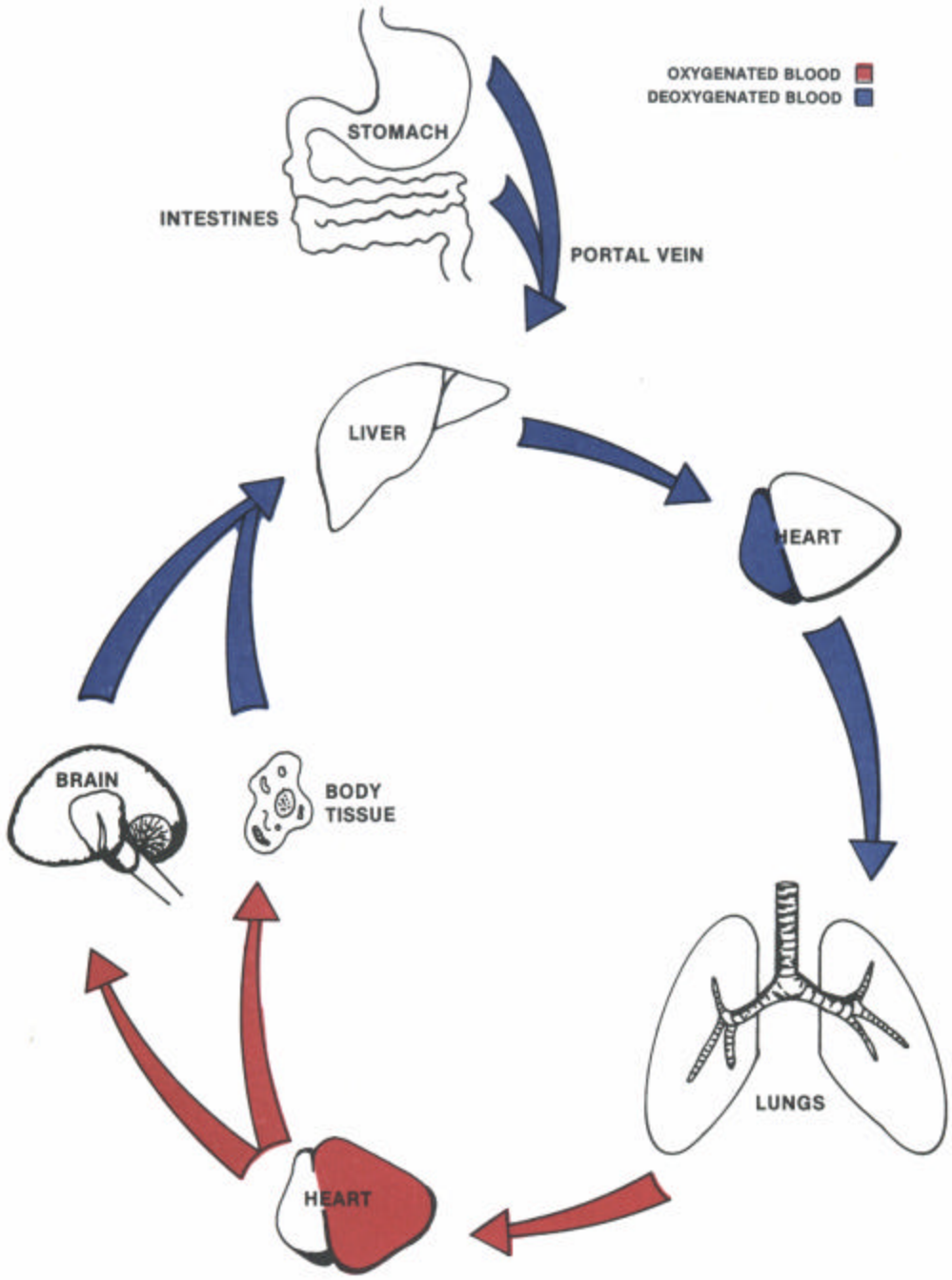

A REPRESENTATION OF ETHYL ALCOHOL DISTRIBUTION PATHWAYS

5-7

Figure 2

WIDMARK'S FACTOR "R"

Widmark proposed the "Factor R" to express the ratio of concentration of alcohol in the whole body to concentration of alcohol to whole blood and found it to be 0.67 for males and 0.55 for females. These are averages based on the total population.

$$R = \frac{\text{Body Alcohol Concentration}}{\text{Blood Alcohol Concentration}} = 0.67 \text{ (for males), } 0.55 \text{ (for females)}$$

This Widmark factor can be used to **approximately estimate**, from the blood alcohol concentration and the person's weight, the total quantity of alcohol in his body **at the time the sample was taken**.

Example:

A 150 pound person has a blood alcohol concentration of 0.15 percent. Assuming his "R" is 0.67, this means he has a body alcohol concentration of 0.15 x .67 = 0.10 percent.

Then 0.10 percent of 150 lbs. = 0.15 lbs. or 0.15 x 16 ozs. = 2.4 avoirdupois ounces. Since the specific gravity of alcohol is 0.8 (lighter than H_20), 2.4 / .8 = 3 fluid ounces of pure alcohol in his body at the time the blood was drawn. This is equivalent to 6 fluid ounces of 100 proof whiskey.

It must be remembered that this figure represents only the unburned alcohol in the body at the time the blood was drawn. This individual would have to drink considerably more than 6 ounces of 100 proof whiskey to reach a blood alcohol concentration of 0.15 percent because he would destroy and excrete some of the alcohol during the period of drinking and absorption. Drinking on a full stomach, the subject would have to drink up to twice that amount of alcohol.

ELIMINATION OF ALCOHOL

Alcohol is eliminated through expiration, excretion, and metabolism.

Expiration of Alcohol:

Alcohol will leave the blood in the lungs and become part of the expired breath. Again, this is due to the hydrophilic property of alcohol and other volatile compounds. It is exhaled with water and carbon dioxide. Its distribution between blood and breath, from the deepest part of the lung (the alveolar or deep lung air), obeys Henry's Law. This law says that there is a constant ratio between the concentration of alcohol in the blood and the breath from the deepest part of the lung (alveolar air). The accepted average ratio is 2100 to 1. This means that 2100 ml of alveolar air will contain the same amount of alcohol that will be present in 1 ml of blood with which it has come to equilibrium.

If you can determine the amount of alcohol in 2100 ml of deep lung air (alveolar), you will know how much alcohol there is in 1 ml of blood. The expired alcohol represents 1 to 2 percent of the alcohol absorbed. The technology of the Intoxilyzer 5000 enables the operator to detect low amounts and quantitate it accurately. This alveolar air is the primary sample that has been tested for the past 50 years and correlated to impaired driving in numerous studies.

Excretion of Alcohol:

Alcohol is excreted through salivation, perspiration, and urination. While the sweat contains traces of alcohol, it can often be detected by the human nose hours after consumption. A larger amount (1 to 2 percent) of the alcohol absorbed is excreted in the urine. Urine can be obtained as an evidentiary sample in North Dakota. It is necessary to void the bladder of old urine and collect a second specimen at least 20 minutes of after emptying the bladder. The second specimen is collected and analyzed for alcohol concentration.

Note: Because urine contains about 33 percent more water than blood, the corresponding legal limit for urine is 0.08 g of alcohol per 67 ml of urine.

Note 2: Saliva is cited in the NDCC as an evidentiary sample. Because the question of residual mouth alcohol is ever present, there is no evidentiary method for saliva alcohol concentration. Subjects who wish to have their saliva tested for alcohol concentration will have to provide a method for collection and a laboratory equipped to analyze the sample.

Excretion and exhalation combined, account for 5 to 10 percent of the alcohol that is given off as unchanged alcohol molecules.

Metabolism of Alcohol:

The most significant loss of alcohol (approximately 90 percent) by the body is by **metabolism**. Metabolism (often referred to as burn-off rate) is the biotransformation of chemicals in the body. Metabolism is one way the body detoxifies foreign substances. The majority of the alcohol metabolism occurs in the liver by two enzymes, alcohol dehydrogenase and aldehyde dehydrogenase. These enzymes convert the alcohol to acetaldehyde and then acetaldehyde to acetic acid. The enzymes further break down the acetic acid molecules to carbon dioxide and water.

The rate of the metabolism can be determined by calculating the alcohol concentration over time in the elimination phase. Widmark called this rate of elimination “The Beta Factor.” The generally accepted “Beta” or “Widmark” elimination factor is 0.015 g alcohol per 100 ml blood per hour. Some experts try to calculate (back or retrograde extrapolate) the blood alcohol concentration from one point in time to another several hours prior time of the blood draw using this factor. This calculation is questionable.

This calculation is most often requested following a motor vehicle crash. Sometimes, the blood specimen of the driver cannot be drawn for more than two hours following the crash. The attorneys want to know what the alcohol concentration was at the time of the crash. This is risky at best. While 0.015 g per 100 ml is generally accepted as an average "burn-off rate", several factors come into play with retrograde extrapolation.

In order to back extrapolate, the expert must assume that the subject has peaked in alcohol concentration and is in the elimination phase. This is difficult to do without the drinking and eating pattern of the subject or more than one blood alcohol concentration, at least one hour between blood draws. Therefore, any subsequent calculation would be invalid. Additionally, one must assume the subject is of good health. There is also a gender difference; women have a higher factor than men. Other factors include drinking tolerance, genetics, age, race, circulatory compromise (due to loss of blood), the actual blood alcohol concentration, and presence and use of other drugs, etc.

THE EFFECTS OF ALCOHOL ON THE CENTRAL NERVOUS SYSTEM

Alcohol is considered to be a drug and is usually classified as an irregularly descending, general, central nervous system depressant.

"Irregularly descending," means the front part of the brain is more sensitive to the effects of alcohol. As the alcohol concentration increases, the front part of the brain becomes more impaired. The progression of the impairment moves toward the back and base of the brain as the alcohol concentration in the blood increases. By depressing the action of the nerves in the brain and the rest of the body, mental and physical performance is decreased.

THE CENTRAL NERVOUS SYSTEM

The central nervous system includes the following:

1. The brain
2. The spinal cord
3. The network of nerves that radiate throughout the body.

THE BRAIN'S FOUR PRIMARY AREAS

1. The frontal lobe
2. The temporal lobe
3. The parietal lobe
4. The lower brain

General functions are assigned to parts of the brain; however, the brain is a complex network of activity and the functions are often interrelated.

Frontal Lobe:

The frontal lobe is often referred to as “The Higher Center of Learning.” This portion of the brain is most sensitive to the effects of alcohol. An alcohol concentration, as low as 0.03 AC, affects this portion of the brain. It is in this lobe that judgment, visual perception, visual acuity, and divided attention skills are formulated. Judgment is regarded as the first skill to be impaired by alcohol.

Temporal Lobe:

The temporal lobe contains the sensory and the motor cortex. This is the next area of the brain to become depressed as the alcohol concentration rises. Sensory nerves deliver information to the brain, while motor nerves take information to various parts of the body. Vision, auditory, olfactory, and reaction time functions are processed in this area of the brain.

Parietal Lobe:

The parietal lobe of the brain is located in the posterior portion of the cranium. It receives and processes visual information and directs it to other portions of the brain.

Lower Brain:

The lower brain consists primarily of the spinal cord, the brainstem, the medulla, the cerebellum, and part of the cerebral cortex. This portion regulates breathing, heart-rate regulation, sexual reproduction, eating, drinking, and growth.

PERFORMANCE OF DRIVING-RELATED TASKS DECREASES AT BAC'S ABOVE ZERO[1]

Low Doses (<0.05 g/dl):

Impaired visual perception, acuity, and complex reaction time

1. Impaired dynamic visual acuity (the ability to see detail in an object in motion)

2. Impaired control over eye movements and the ability to merge two images into one

3. Increase duration of eye fixations and therefore reduced eye movements

4. Impaired divided attention (the ability to discriminate among stimuli and respond appropriately as quickly as possible)

5. Impaired divided attention (the ability to attend to more than one thing at a time)

6. Impaired complex reaction time (the ability to discriminate among stimuli and respond appropriately as quickly as possible)

Moderate Doses (BAC 0.05-0.08 g/dl):

Impaired vigilance, judgment, reaction time, and psychomotor performance

1. Impaired concentrated attention (the ability to pay close attention to one thing)

   A) Impaired vigilance (the ability to attend to or to detect an event over a long period of time)

   B) Impaired vergence (the ability to change focus rapidly, following, or tracking a moving object)

2. Impaired saccadic movement (rapid eye movement which allows perception of objects in peripheral vision)

3. Impaired dark adaptation

4. Impaired information processing (some reports indicate impairment at 0.02 g/dl)

---

[1] "The Effect of Alcohol on Sensory Functions" by Robert B. Forney, Jr.; Ph.D.; DABFT, Medical College of Ohio; Department of Pathology; Toledo, Ohio. (Presented at the International Association for Chemical Testing Annual Meeting; Missoula, MT, 1997).

5. Impaired judgment

   A) Decision making

   B) Risk-taking

   C) Emergency response

6. Impaired reaction time

7. Impaired psychomotor performance (the ability to make highly-controlled muscular movement of a number of limbs simultaneously)

8. Impaired compensatory tracking (tracking to maintain an index at a predetermined position). This type of tracking is involved in maintaining a vehicle in its proper lane of travel.

9. Impaired critical tracking (tracking of moving object and compensating to maintain relative position). This type of tracking would be involved in compensating for unexpected movements of other vehicles being tracked.

10. Increased numbers of errors

    A) Steering
    B) Gear changing
    C) Braking response time
    D) Tracking
    E) Vehicle positioning
    F) Lane changing
    G) Speed maintenance
    H) Acceleration

11. Horizontal Gaze Nystagmus

12. 0.08 g/dl

    A) The National Safety Council's Committee on Alcohol and Drugs takes the position that a concentration of 80 milligrams of ethanol per 100 milliliters of whole blood (0.08% w/v) in any driver of a motor vehicle is indicative of impairment in his driving performance.

Higher Doses (BAC > 0.12 g/dl):

Problem Intoxication

1. When a BAC of 0.12 g/dl is rapidly attained, the vomit center in the brain is stimulated, but some inhibition of gag reflex that protects the airway from the aspiration of emesis also occurs.

2. Unsteady gait and sedation in non-tolerant individuals.

3. At 0.20 g/dl is attained, the vomit center is inhibited and more toxic doses may be achieved without the protection afforded by emesis.

4. Above 0.20 g/dl, pronounced loss of muscular control and instinctive behavior.

5. Above 0.35 g/dl; coma, seizures, and cardio-respiratory failure.

PHARMACOLOGICAL EFFECTS OF ALCOHOL

The stages of alcohol impairment are illustrated on the following chart and table.

Note: No one person will exhibit all of the signs of impairment that are listed for a particular alcohol concentration. The ranges of impairment overlap and are to be used as a guide to symptoms and signs you may observe and wish to include in your reports.

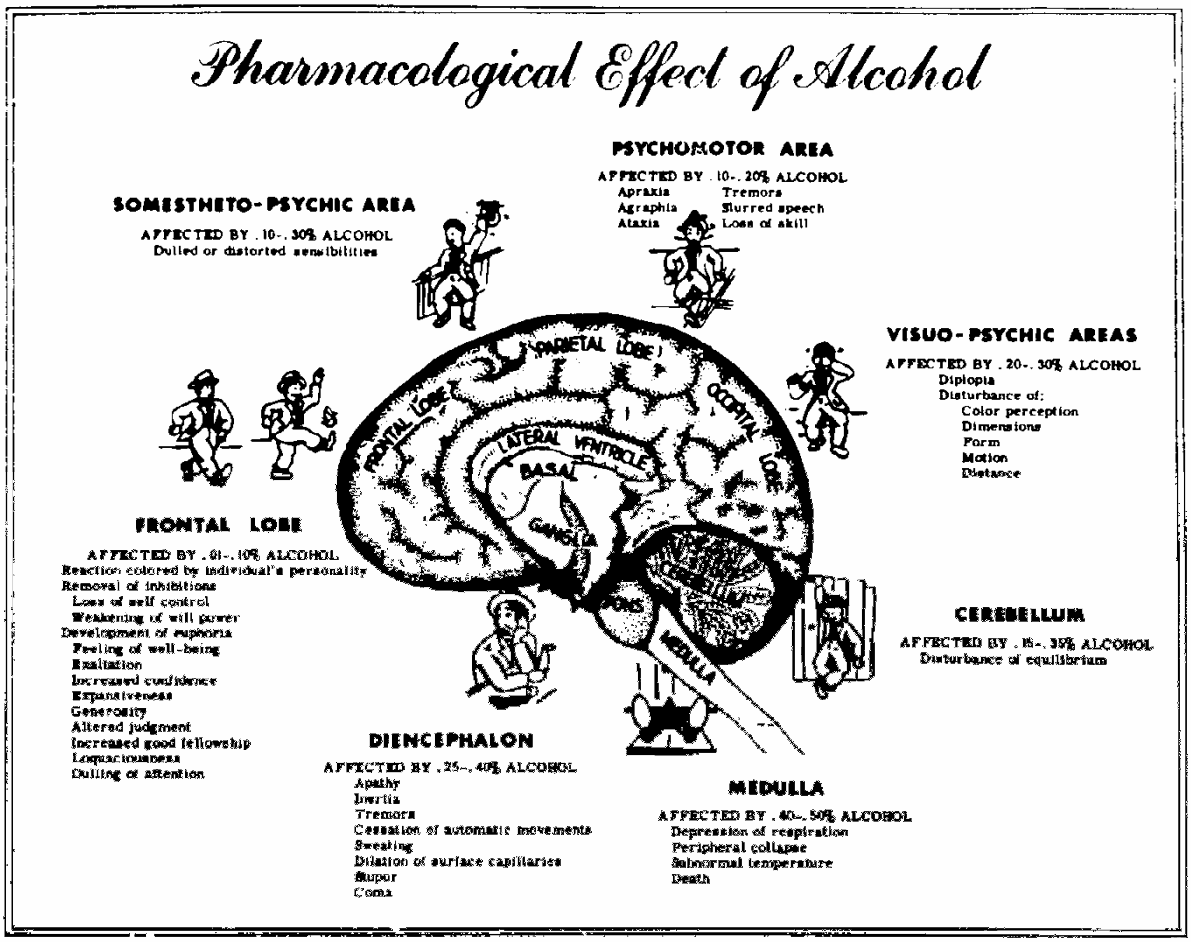

Chart 2

STAGES OF ACUTE ALCOHOLIC INFLUENCE/IMPAIRMENT

STATES OF ACUTE ALCOHOLIC INFLUENCE/INTOXICATION

Ethyl Alcohol Level (Percent by Weight/Blood)	Stage of Alcoholic Influence	Clinical Signs/Symptoms
0.01-0.05	Sobriety	No apparent influence Behavior nearly normal by ordinary observation Slight changes detectable by special tests
0.03-0.12	Euphoria	Mild euphoria, sociability, and talkativeness Diminution of attention, judgement, and control Increased self-confidence, decreased inhibitions Loss of efficiency in finer performance tests
0.09-0.25	Excitement	Emotional instability, decreased inhibitions, and loss of critical judgement Impairment of memory and comprehension Decreased sensitory response; increased reaction time Some muscular incoordination
0.18-0.30	Confusion	Disorientation, mental confusion, and dizziness Exaggerated emotional states (fear, anger, grief, etc.) Disturbance of sensation (diplopia, etc.) and of perception of color, form, motion, and dimensions Decreased pain sense Impaired balance; muscular incoordination; staggering gait; slurred speech
0.27-0.40	Stupor	Apathy; general inertia, approaching paralysis Markedly decreased response to stimuli Marked muscular incoordination; inability to stand or walk Vomiting; incontinence of urine and feces Impaired consciousness; sleep or stupor
0.35-0.50	Coma	Complete unconsciousness; coma; anesthesia Depressed or abolished reflexes Subnormal temperature Incontinence of urine and feces Embarrassment of circulation and respiration Possible death
0.45+	Death	Death from respiratory paralysis

Kurt M. Dubowski, Ph.D., FAIC
Director, Department of Clinical Chemistry and Toxicology
University of Oklahoma - Oklahoma City 4, Oklahoma
Member, Committee on Alcohol and Drugs, National Safety Council

Table 2

When assessing the alcohol impaired person, some considerations should be given:

MELLANBY EFFECT

The Mellanby Effect describes how the body (mind) constantly compares itself to a prior point in time. During the absorption phase, the alcohol concentration is rising. The body feels it is less intoxicated or impaired than it really is because it recalls a prior time when the alcohol concentration was lower. This makes the driver in the range of 0.08 to 0.12 AC particularly dangerous because he is willing to take risks.

Likewise, the driver in the elimination phase feels lousy because the body remembers a prior point in time when the alcohol concentration was higher.

SOBERING UP THE INTOXICATED PERSON

Metabolism of alcohol may be stimulated by fructose; however, this is limited by its toxicity. Cold showers, exercise, and caffeine are of little value to detoxify an intoxicated person. Metabolism over **time** is the only way to sober up the drinking subject.

Occasionally, individuals will remove outerwear in the frigid weather because they feel flushed. The flushing occurs when the blood vessels dilate. This causes the body to give off heat near the temperature sensors in the skin. Because individuals are feeling warm, they shed their clothing and inadvertently suffer from exposure to the cold.

The human body has a vomit control center (VCC) in the stomach to rid the body of irritating or toxic substances. At alcohol concentrations greater than 0.12 AC, the activity of this center is depressed and will not react. As a result, alcohol in the GI Tract continues to be absorbed, often to lethal levels. When individuals consume a great deal of alcohol in a short period of time, the alcohol concentration can rise rapidly, bypassing the VCC trigger; therefore, over-riding the detoxification function of vomiting.

BLACKOUTS

The way the brain functions is still largely unknown. One phenomenon that occurs in the alcoholic is blackouts. It is regarded as one of the first signs of alcoholism. No one is able to explain why blackouts occur. It is a time when an intoxicated person appears to be fully functional; however, he has no memory of the events. A more peculiar aspect is that, when the person is brought to the same state of intoxication, he may remember the prior events once experienced in a blackout. Blackouts have been reported from minutes to months in length.

CARE GIVEN TO THE INEBRIATED PRISONER

Each agency should have a policy as to how to handle the inebriated prisoner. Often the prisoner is detained at a high alcohol concentration (0.25 AC or greater). The policy should include proper medical protocol and required surveillance. The correctional officer cannot tell from a single breath alcohol analysis if the prisoner has reached his peak alcohol concentration. Possibly, alcohol remains in the GI Tract, yet to be absorbed.

BLOOD, URINE, AND POST MORTEM KITS

Following are kits pictured with their respective outside labeling. Note that the kit label identifies that the kit is to be used for collecting either blood, urine, or post mortem samples and indicates the expiration of the kit.

Blood Kits . . .

Urine Kits . . .

Post Mortem Kits . . .

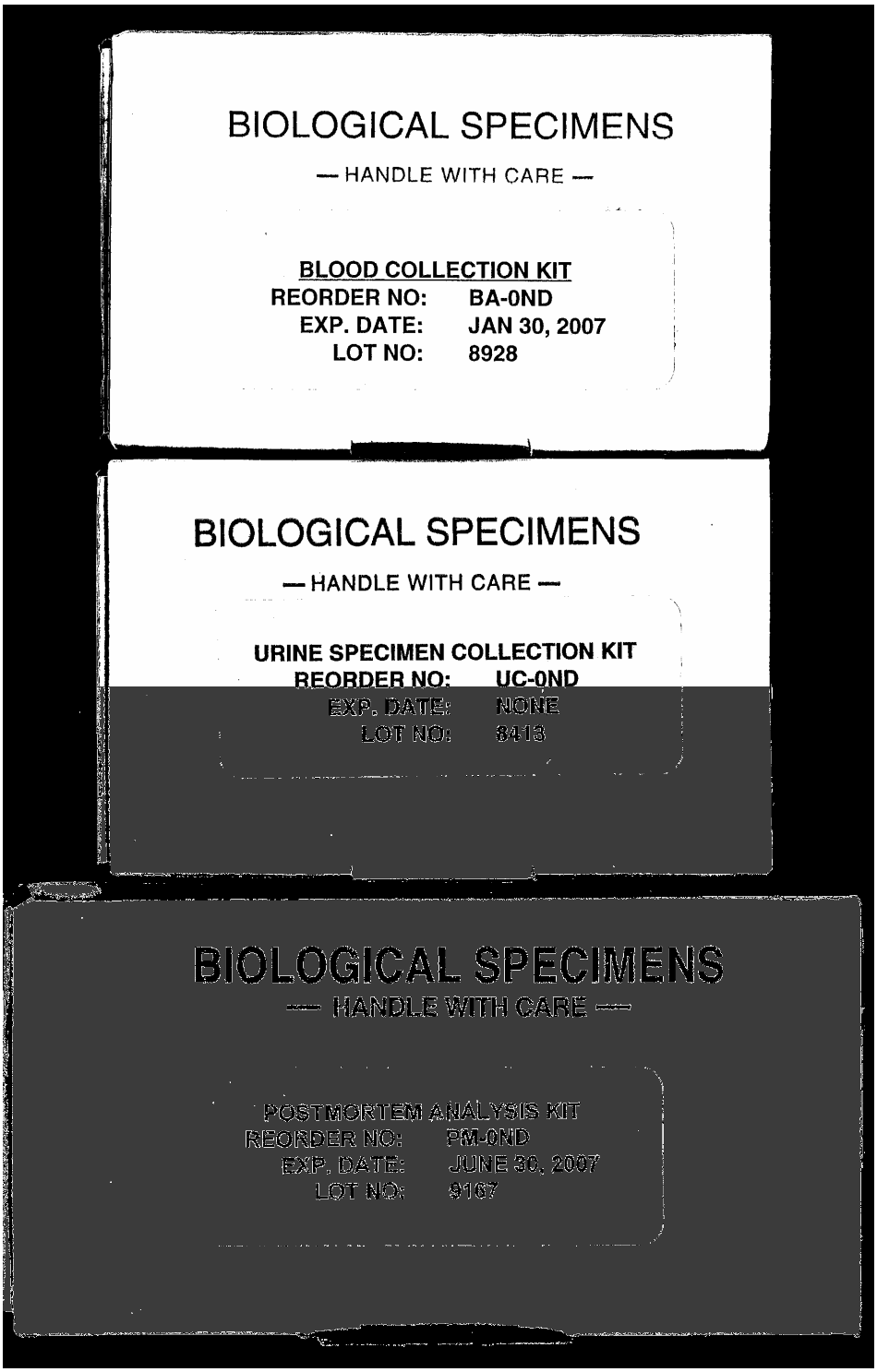

PROCEDURE FOR COLLECTION AND SUBMISSION OF BLOOD SPECIMENS FOR ALCOHOL AND DRUG ANALYSIS

Since the majority of these samples are collected with the intent of using the results of the analysis in court proceedings, it is important that the specimens are collected and handled in accordance with the best rules of evidence.

Care and Handling of Blood Specimens:

The specimen container has been prepared and sealed by a vendor. It was then shipped to agencies directly from the Office of Attorney General, Crime Laboratory Division. To preclude adulteration and to maintain integrity of the sample, the container must remain sealed. Whenever possible, the seal should be broken in the presence of the qualified blood drawer, the subject, and the law enforcement officer involved. Notation as to the condition of the seal prior to opening should be made on the enclosed Submission for Blood Form 104.

The mailing box contains the following: blood collection tube, tube and needle holder, safety needle, bubble-pack blood tube protector, liquid absorbing sheet, blood tube specimen security seals, Ziploc bag, prep pad, kit box shipping seal, FDA insert, and Submission for Blood (104) form.

Note: Should any item be missing or be damaged, alternatives may be used. The Submission for Blood Form 104, vacutainer, specimen label, and return address label should be taken from another kit. The needle may be replaced with any sterile needle. Likewise, a vacutainer guide or holder or syringe and needle may be used from your supplies. The disinfectant must be a product that contains 0.02 percent or less alcohol. The absorbent pad or plastic bag may be obtained from your supplies.

Note: See the memos, **"Memo to Emergency Room Supervisors and Personnel" and "List of Approved Designations of Individuals Medically Qualified to Draw Blood,"** that follow for more information.

The current kits are tagged with a lot number indicating the mailing box, vacutainer, disinfectant, top and bottom portions of the Submission for Blood Form 104, etc. The vacutainer tube contains two chemicals that act as an anti-coagulant and preservative to prevent the generation of alcohol after the blood sample is drawn. These chemicals are highly toxic. The vacutainer tubes are to remain stoppered to prevent skin contact with the chemicals. In case of contact, wash the affected area immediately and seek medical attention.

Memo to Emergency Room Letter of Certification (Page One):

State of North Dakota)
)ss
County of Burleigh)

I, Margaret A. Pearson, do hereby certify that I am a duly-appointed State Toxicologist for the State of North Dakota and an official custodian of the records and files of the office thereof, that I have carefully compared the **MEMO TO EMERGENCY ROOM SUPERVISORS AND PERSONNEL (JANUARY 2, 2004)** hereto attached with the respective original as the same appears of record on file in the Office of the Attorney General, Crime Laboratory Division, in the County of Burleigh, North Dakota, and find the same to be a true and correct copy thereof and of the whole thereof. In witness whereof I have set my hand at the city of Bismarck, in said county this:

2nd day of January, 2004

Margaret A. Pearson

Margaret A. Pearson, State Toxicologist

State of North Dakota)
)ss
County of Burleigh)

On this 2 day of January, 2004, before me personally appeared Margaret A. Pearson, known to me to be the State Toxicologist for the State of North Dakota, acknowledged to me that she has executed the same.

Subscribed to and sworn before me this:

2 day of January, 2004

Cindy Leingang

Cindy Leingang, Notary Public, State of North Dakota
My Commission Expires January 11, 2005

CINDY LEINGANG
Notary Public, STATE OF NORTH DAKOTA
My Commission Expires JANUARY 11, 2005

(SEAL)

Memo to Emergency Room (Page Two):

OFFICE OF ATTORNEY GENERAL
Crime Laboratory Division
2635 East Main Avenue (58501)
P.O. Box 937
Bismarck, ND 58502-0937

Tel. (701) 328-6159
(800) 296-2054
Fax (701) 328-6145

MEMO TO: Emergency Room Supervisors & Personnel
FROM: Margaret A. Pearson, State Toxicologist
DATE: January 2, 2004
REGARDING: Blood Alcohol Collection Kits

Since the inception of this office in 1961, the State Toxicology Laboratory has been supplying the blood collection kits used for alcohol testing. The present blood collection kits contain most of the components needed for withdrawing blood. On occasion, you may need to use a substitute for an item in the kit. If a substitute component is used, that information should be documented on the Submission for Blood, Form 104. Listed below are the kit components and their acceptable alternatives:

KIT COMPONENTS	ACCEPTABLE ALTERNATIVES
1) Submission for Blood, Form 104	From another kit of the same Kit Lot No.
2) Vacutainer tube	From another kit of the same Kit Lot No.
3) Needle	From your supplies (any sterile needle and/or syringe)
4) Disinfectant*	From another kit of the same Kit Lot No. or germicidal soap or hydrogen peroxide
5) Guide (vacutainer holder)	From your supplies
6) Specimen label	From another kit
7) Absorbent pad	From your supplies or another kit
8) Plastic bag	From your supplies or another kit
9) Return address label or shipping seal from another kit	

These kits are assembled and sealed at the Crime Laboratory Division or by an approved supplier. An expiration date is marked on the kits. Do not use the kit after this date. Using the kit after its expiration date will not affect the alcohol test, but could result in insufficient blood being collected. Please note that either the specimen collector and/or specimen submitter should verify that the kit was intact before use and make checks appropriately on the Form 104.

A blood sample obtained according to the instructions listed on Form 104 and utilizing a blood collection kit supplied by the Crime Laboratory Division will be considered properly obtained.

This memorandum supersedes the memoranda of July 2, 1992, March 29, 1993, May 2, 1994, September 27, 1999, September 1, 2000, and June 15, 2003.

*Disinfectant products containing 0.02 percent or less alcohol will be considered non-alcoholic for this purpose.

List of Approved Designations Certification Cover Letter (Page One):

NORTH DAKOTA
STATE DEPARTMENT OF HEALTH
2635 East Main Avenue
P.O. Box 937
Bismarck, North Dakota 58502-0937
FAX 701-328-6145

State of North Dakota)
)ss
County of Burleigh)

I, Margaret A. Pearson, do hereby certify that I am the duly-appointed Acting State Toxicologist of the State of North Dakota and the official custodian of the records and files of the office thereof, that I have carefully compared the **LIST OF APPROVED DESIGNATIONS OF INDIVIDUALS MEDICALLY QUALIFIED TO DRAW BLOOD** hereto attached with the respective original as the same appears of record on file in the Toxicology Laboratory in the County of Burleigh, North Dakota and find the same to be a true and correct copy thereof and of the whole thereof. In witness whereof I have set my hand at the city of Bismarck, in said county this **1st** day of **September**, **2000**.

Margaret A. Pearson, Acting State Toxicologist

State of North Dakota)
)ss
County of Burleigh)

On this **1st** day of **September, 2000**, before me personally appeared Margaret A. Pearson, known to me to be the Acting State Toxicologist for the State of North Dakota, acknowledged to me that she has executed the same.

Subscribed to and sworn before me this **1st** day of **September**, **2000**.

Cindy Leingang, Notary Public, State of North Dakota
My Commission Expires January 11, 2005

CINDY LEINGANG
Notary Public, STATE OF NORTH DAKOTA
My Commission Expires JANUARY 11, 2005

Chemistry	Forensic Science	Toxicology	Medical Examiner
701-328-6140	701-328-6159	701-328-6141	701-328-6138

List of Approved Designations (Page Two):

NORTH DAKOTA
STATE DEPARTMENT OF HEALTH
2635 East Main Avenue
P.O. Box 937
Bismarck, North Dakota 58502-0937

FAX 701-328-6145

September 1, 2000

LIST OF APPROVED DESIGNATIONS OF INDIVIDUALS MEDICALLY QUALIFIED TO DRAW BLOOD

The following professional designations are medically qualified to draw blood for the purpose of determining the alcohol, drug, or combination thereof, content of blood pursuant to N.D.C.C. Sections 20.1-13.1-03, 20.1-15-03, 39-20-02, and 39-24.1-03:

Physician	As defined by N.D.C.C. Section 43-17-01
RN	Registered Nurse
PBT	Phlebotomy Technician
MLT	Medical Laboratory Technician
CLT	Clinical Laboratory Technician
MT	Medical Technologist
CLS	Clinical Laboratory Scientist
LPN*	Licensed Practical Nurse*

* Only those Licensed Practical Nurses (LPNs) who have successfully completed a board approved intravenous therapy course.

This list is current and shall be considered as such until a new list is issued.

Margaret A Pearson
September 1, 2000

Chemistry 701-328-6140 | Forensic Science 701-328-6159 | Toxicology 701-328-6141 | Medical Examiner 701-328-6138

Collection of Blood Samples:

***Note*: For a complete drug screen, both BLOOD and URINE should be submitted.**

The materials contained in the blood alcohol mailing box will allow you to collect blood samples for the purpose of quantifying the alcohol concentration.

Care must be taken to avoid contact with any possible blood-borne pathogens. Consult the blood collector for information.

Upon opening the mailing box, the blood specimen collector should disinfect the skin of the subject with a non-alcoholic disinfectant[1] and withdraw the blood sample with the aid of the needle, guide, or holder, and the vacutainer. If necessary, a sterile needle and syringe can be used to withdraw the blood and introduce it to the vacutainer tube. The rubber stopper of the vacutainer should not be removed from the tube.

The officer should retain custody of the blood sample from this time on. The officer should then complete the sample label and affix it to the vacutainer tube. Take care to ensure the writing is legible. The blood tube and the absorbent pad should be placed in the plastic bag. This will prevent any exposure to blood in case of tube breakage. The top portion of the completed Blood Submission Form104 should be placed outside the plastic bag, inside the mailing box.

Completion of the Toxicology Form 104:

Except for signatures, **all information** on this form **should be neatly printed**. The Submission for Blood Form 104 is split by a perforated line and should be handled as follows:

1. **Top Half of Submission for Blood Form 104**:

   A) The officer should complete information on the top portion from "subject" through "remarks." Each space should be filled out if the information is available. **The officer should indicate whether the sample is being done for alcohol and/or drug analysis. It should be understood that some drugs might be found only in urine; therefore, blood and urine should be obtained when requesting drug screens. In that case, the two specimen kits should be taped together and submitted**. The county of arrest should be noted. The "remarks" section should contain any note the officer feels is important.

[1]Solution contains less than 0.02% alcohol.

B) The lower left corner of the form is to be completed by the blood collector.

C) The lower right-hand corner of the top portion is to be filled in by personnel in the Toxicology Section.

D) The top portion is to be returned in the mailing box with the blood sample. It should be folded and wrapped around the plastic bag containing the blood tube and absorbent pad and then placed in the mailing box.

2. **<u>Bottom Half of Submission of Blood Form 104</u>**:

A) The bottom portion is to be completed by the officer and retained with his/her records concerning this case.

<u>Sealing the Mailing Box</u>:

The officer should then fill out the return mailing label and affix it to the closed mailing box.

<u>Note</u>: Make sure you have the correct seal on each item. Place the BLOOD TUBE SEAL directly over the tube/rubber stopper.

Box Seal ?

Specimen Seal ?

Figure 1

The officer must maintain custody of the blood specimen until it can be mailed or hand-delivered. A locked refrigerator or storage cabinet will suffice.

The specimen may be delivered or mailed to:

Office of Attorney General
Crime Laboratory Division
2635 East Main Avenue (58501-5044)
P.O. Box 937
Bismarck, ND 58502-0937

Submission for Blood (104) Letter of Certification (Page One):

State of North Dakota)
)ss
County of Burleigh)

I, Margaret A. Pearson, do hereby certify that I am a duly-appointed State Toxicologist for the State of North Dakota and an official custodian of the records and files of the office thereof, that I have carefully compared the **SUBMISSION FOR BLOOD (104); BAOND: SUB.7 9/03** hereto attached with the respective original as the same appears of record on file in the Office of the Attorney General, Crime Laboratory Division, in the County of Burleigh, North Dakota, and find the same to be a true and correct copy thereof and of the whole thereof. In witness whereof I have set my hand at the city of Bismarck, in said county this **14TH** day of **NOVEMBER**, **2003**.

Margaret A. Pearson

Margaret A. Pearson, State Toxicologist

State of North Dakota)
)ss
County of Burleigh)

On this **14TH** day of **NOVEMBER, 2003**, before me personally appeared Margaret A. Pearson, known to me to be a State Toxicologist for the State of North Dakota, acknowledged to me that she has executed the same.

Subscribed to and sworn before me this **14TH** day of **NOVEMBER**, **2003**.

Cindy Leingang

Cindy Leingang, Notary Public, State of North Dakota
My Commission Expires January 11, 2005 (SEAL)

CINDY LEINGANG
Notary Public, STATE OF NORTH DAKOTA
My Commission Expires JANUARY 11, 2005

Uncompleted Submission for Blood (104) (Page Two):

SUBMISSION FOR BLOOD (104)
Office of Attorney General, Crime Laboratory Division
2635 East Main Avenue, P.O. Box 937
Bismarck, ND 58502-0937 • (701) 328-6159
SFN 50491 (8/04)

Kit Lot No. _____ Kit Exp. Date _____
Vacutainer Lot No. _____ Exp. Date _____
Disinfectant Lot No. _____ Exp. Date _____

Please Print All Information

Subject (Last, First, Initial)	Birth Date___/___/___ (Month/Day/Year)	Weight	Sex: ☐ Male ☐ Female
Check One: ☐ Arrested for DUI/APC ☐ Personal Request ☐ Other _____	Driver's License Number		State
Specimen: ☐ Blood ☐ Other _____	Analysis: ☐ Alcohol ☐ Drug Screen List Medications and/or Suspected Drugs: _____		
Specimen Submitted By (Name)		Submitting Agency	
Submitting Agency Address	City	State	Zip Code
Remarks		County of Arrest	

To Be Completed By Blood Specimen Collector

Check Each Item Performed:
- ☐ Used an Intact Kit
- ☐ Observed Powder in Vacutainer Tube
- ☐ Used Disinfectant Provided in Kit
- ☐ Used Needle, Guide, and Tube Provided in Kit
- ☐ Drew Blood Into Tube and Inverted Several Times
- ☐ Used Alternative Disinfectant _____
- ☐ Used Alternative Needle and Syringe _____

Time Specimen Obtained: _____ A.M. P.M	Date Specimen Obtained: ___/___/___ (Month/Day/Year)

Remarks

I certify that I withdrew the blood specimen from the above subject and the information given in this section is true and correct.

_____
Specimen Collector's Signature

_____
Please Print Specimen Collector's Name and Title

_____
Facility Where Sample Was Drawn

For Laboratory Use – Do Not Write in This Space

Laboratory Case Number

Specimen Received From: ☐ Postal Delivery ☐ Other _____

Time Specimen Received: _____ A.M. P.M	Date Specimen Received: ___/___/___ (Month/Day/Year)

Received:
- ☐ In a Sealed Container
- ☐ In a Labeled Blood Tube

By _____

Remarks

Arresting Officer: Tear Along the Perforation and Retain Bottom Portion for Your Records.

To Be Completed By Specimen Submitter

Subject (Last, First, Initial)	Time Specimen Obtained: _____ A.M. P.M	Date Specimen Obtained: ___/___/___ (Month/Day/Year)
Specimen Sealed By (Last, First, Initial)	Time Specimen Sealed: _____ A.M. P.M	Date Specimen Sealed: ___/___/___ (Month/Day/Year)

Check Each Step Performed

SAMPLE DISPOSAL WILL OCCUR 12 MONTHS AFTER ANALYSIS REPORTING DATE

- ☐ Used an Intact Kit.
- ☐ Affixed Completed Specimen Label/Seal Over the Top and Down the Sides of the Blood Tube.
- ☐ Placed the Blood Tube Inside the Blood Tube Protector and Then Placed it in the Plastic Bag Provided. **(Do Not Remove the Liquid Absorbing Sheet.)**
- ☐ Placed the Plastic Bag and Completed Top Portion of This Form in the Kit Box and Closed It.
- ☐ Affixed Tamper-Evident Kit Box Shipping Seal on Kit Box.

I Certify That All Information Given in This Section is True and Correct.

Signed

If Sending By Mail, Affix Postage.

BAOND SUB.6 8/04

Completed Example of Submission for Blood (104) (Page Two):

SUBMISSION FOR BLOOD (104)
Office of Attorney General, Crime Laboratory Division
2635 East Main Avenue, P.O. Box 937
Bismarck, ND 58502-0937 • (701) 328-6159
SFN 50491 (1/05)

Kit Lot No .8928 Kit Exp. Date 06-30-06
Vacutainer Lot No. 503709 Exp. Date 01-30-07
Disinfectant Lot No. 4K029EDC Exp. Date 9-30-07

Please Print All Information

Subject (Last, First, Initial)	Birth Date (Month/Day/Year)	Weight	Sex: ☒ Male ☐ Female
Peterson, Zachary L.	09/01/47	185	

Check One: ☒ Arrested for DUI/APC ☐ Personal Request ☐ Other	Driver's License Number	State
	99989 1724 ND	ND

Specimen: ☒ Blood ☐ Other
Analysis: ☒ Alcohol ☐ Drug Screen
List Medications and/or Suspected Drugs:

Specimen Submitted By (Name)	Submitting Agency
OFF MATILDA JONES	Los Angelos PD

Submitting Agency Address	City	State	Zip Code
403 Main Ave	LOS ANGELOS	ND	58000

Remarks	County of Arrest
	BURLEIGH

To Be Completed By Blood Specimen Collector

Check Each Item Performed:
- ☒ Used an Intact Kit
- ☒ Observed Powder in Vacutainer Tube
- ☒ Used Disinfectant Provided in Kit
- ☒ Used Needle, Guide, and Tube Provided in Kit
- ☒ Drew Blood Into Tube and Inverted Several Times
- ☐ Alternate Item(s) Used

Time Specimen Obtained:	Date Specimen Obtained:
10:24p ☐ A.M. ☒ P.M	09/01/04 (Month/Day/Year)

Remarks

I certify that I withdrew the blood specimen from the above subject and the information given in this section is true and correct.

Rose Nylan RN
Specimen Collector's Signature

Rose Nylan, RN
Please Print Specimen Collector's Name and Title

Los Angelos, ND Med Center
Facility Where Sample Was Drawn

For Laboratory Use – Do Not Write in This Space

Laboratory Case Number

Specimen Received From: ☐ Postal Delivery ☐ Other

Time Specimen Received:	Date Specimen Received:
☐ A.M. ☐ P.M	/ / (Month/Day/Year)

Received:
☐ In a Sealed Container
☐ In a Labeled Blood Tube

By

Remarks

Arresting Officer: Tear Along the Perforation and Retain Bottom Portion for Your Records.

To Be Completed By Specimen Submitter

Subject (Last, First, Initial)	Time Specimen Obtained:	Date Specimen Obtained:
Peterson, Zachary L.	10:24 ☐ A.M. ☒ P.M	09/01/04 (Month/Day/Year)
Specimen Sealed By (Last, First, Initial)	**Time Specimen Sealed:**	**Date Specimen Sealed:**
Off Matilda Jones	10:26 ☐ A.M. ☒ P.M	09/01/04 (Month/Day/Year)

Check Each Step Performed **SAMPLE DISPOSAL WILL OCCUR 12 MONTHS AFTER ANALYSIS REPORTING DATE**

- ☒ Used an Intact Kit.
- ☒ Affixed Completed Specimen Label/Seal Over the Top and Down the Sides of the Blood Tube.
- ☒ Placed the Blood Tube Inside the Blood Tube Protector and Then Placed it in the Plastic Bag Provided. **(Do Not Remove Liquid Absorbing Sheet.)**
- ☒ Placed the Plastic Bag and Completed Top Portion of This Form in the Kit Box and Closed It.
- ☒ Affixed Tamper-Evident Kit Box Shipping Seal on Kit Box.

I Certify That All Information Given in This Section is True and Correct.

Signed Off Matilda Jones #445

If Sending By Mail, Affix Postage. BAOND SUB 9.3/05

PROCEDURE FOR COLLECTION AND SUBMISSION OF URINE SPECIMENS FOR ALCOHOL AND DRUG ANALYSIS

Since the majority of these samples are collected with the intent of using the results of the analysis in court proceedings, it is important that the specimens are collected and handled in accordance with the best rules of evidence.

Care and Handling of Urine Specimens:

The specimen container has been prepared and sealed by a vendor. It was then shipped to agencies directly from the Office of Attorney General, Crime Laboratory Division. Notation as to the condition of the cardboard box seal (tape and mailing label) should be made on the enclosed Submission for Urine Form (104-U). Cutting through the label and tape may open the box. Enclosed should be a closed plastic specimen container containing a white powder, a seal for the container, a Submission for Urine Form (104-U), a plastic bag containing an absorbent pad, and a return mailing label.

The white solid in the container is sodium azide. This chemical is highly toxic and due care should be exercised. If the chemical is ingested, medical attention should be obtained. Specimen handlers should wear plastic gloves to prevent exposure to this chemical and biohazards.

Collection of the Urine Specimen:

***Note*: For a complete drug screen, both BLOOD and URINE should be submitted.**

The subject should be observed during the urine specimen collection whenever possible. The urine specimen need not be collected in a medical facility. The officer should open the kit in the presence of the subject and note that the seal was intact before use in the lower portion of the Submission for Urine Form (104-U). The label should be filled out with the subject's name, the time and the date the specimen was collected, and the initials of the officer or the medical assistant sealing the container. The seal should be placed on the lid with the two ends pressed down on either side of the container. The container should be placed in the plastic bag with the absorbent pad to prevent leakage of the specimen during shipment.

Completion of the Submission for Urine Form (104-U):

1. **Top Half of Submission for Urine Form (104-U)**:

   A) The officer should complete information on the top portion from "subject" through "remarks." Each space should be filled out if the information is available. **The officer should indicate whether the sample is being done for alcohol and/or drug analysis. He/she may request a specific drug or a drug screen of commonly abused drugs. It should be understood that some drugs might be found only in blood. In that case, a separate specimen of blood should be submitted**. The county of arrest should be noted. The "remarks" section should contain any note the officer feels is important.

   B) The middle section "For Laboratory Use-Do Not Write in This Space" of the form's top half is to be filled in by personnel in the Toxicology Section.

   C) The top portion is to be returned in the mailing box with the urine sample. It should be folded and wrapped around the plastic bag containing the urine container and absorbent pad and then placed in the mailing box.

2. **Bottom Half of Submission for Urine Form (104-U)**:

   A) The bottom portion of the Submission for Urine Form (104-U) is to be completed by the officer and retained with his/her records concerning this case.

Sealing the Mailing Box:

The sealed specimen and top half of the completed Submission for Urine Form (104-U) should be placed in the mailing box. The top of the box should be sealed and the return label affixed.

Note: Make sure you have the correct seal on each item.

Box Seal ?

Specimen Seal ?

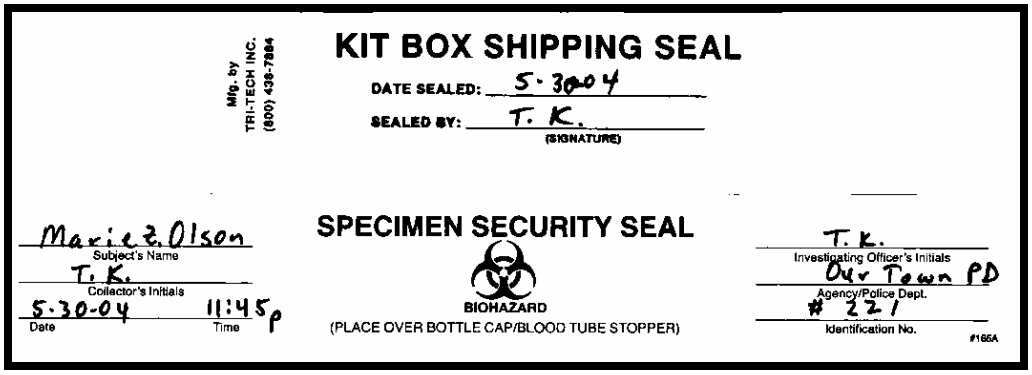

Figure 2

Storage and Delivery of Specimen:

The officer must maintain custody of the urine specimen until it can be mailed or hand-delivered. A locked refrigerator or storage cabinet will suffice.

The sealed kit may be delivered or mailed to:

Office of Attorney General
Crime Laboratory Division
2635 East Main Avenue (58501-5044)
P.O. Box 937
Bismarck, ND 58502-0937

Submission for Urine Form (104-U) Letter of Certification (Page One):

State of North Dakota)
)ss
County of Burleigh)

I, Margaret A. Pearson, do hereby certify that I am a duly-appointed State Toxicologist for the State of North Dakota and an official custodian of the records and files of the office thereof, that I have carefully compared the **SUBMISSION FOR URINES (104-U); UCOND: SUB.3 11/03** hereto attached with the respective original as the same appears of record on file in the Office of the Attorney General, Crime Laboratory Division, in the County of Burleigh, North Dakota and find the same to be a true and correct copy thereof and of the whole thereof. In witness whereof I have set my hand at the city of Bismarck, in said county this:

9th day of March, 2004

Margaret A Pearson

Margaret A. Pearson, State Toxicologist

State of North Dakota)
)ss
County of Burleigh)

On this 9 day of March, 2004 before me personally appeared Margaret A. Pearson, known to me to a State Toxicologist for the State of North Dakota, acknowledged to me that she has executed the same.

Subscribed to and sworn before me this:

9 day of March, 2004

Cindy Leingang

Cindy Leingang, Notary Public, State of North Dakota
My Commission Expires January 11, 2005

(SEAL)

CINDY LEINGANG
Notary Public, STATE OF NORTH DAKOTA
My Commission Expires JANUARY 11, 2005

Uncompleted Submission for Urine Form (104-U) (Page Two):

SUBMISSION FOR URINES (104-U)
OFFICE OF ATTORNEY GENERAL, CRIME LABORATORY DIVISION
2635 East Main Avenue, P.O. Box 937
Bismarck, ND 58502-0937 • (701) 328-6159
SFN 50159 (12-03)

PLEASE PRINT ALL INFORMATION

Subject (Last, First, Initial)	Birth Date ___/___/___ (Month/Day/Year)	Weight	Sex: ☐ Male ☐ Female
Check One: ☐ Arrested for DUI/APC ☐ Personal Request ☐ Other (Specify)_____	Driver's License Number		State
Specimen: ☐ Urine ☐ Other (Specify)	Analysis Requested: ☐ Alcohol ☐ Drug Screen ☐ THC Only	Suspected Drugs:	
Time Specimen Obtained: ☐ A.M. ☐ P.M.	Date Specimen Obtained: ___/___/___ (Month/Day/Year)	County of Arrest	
Specimen Submitted By (Name)	Submitting Agency		
Submitting Agency Address	City	State	Zip Code
Remarks			

FOR LABORATORY USE - DO NOT WRITE IN THIS SPACE

Laboratory Case Number:	Received: ☐ In a Sealed Container ☐ In a Labeled Urine Container	
Specimen Received From: ☐ P.O. Box Delivery ☐ Other (Specify)	Specimen Received By (Name):	
Time Specimen Received: ☐ A.M. ☐ P.M.	Date Specimen Received: ___/___/___ (Month/Day/Year)	Remarks

Arresting Officer: Tear Along the Perforation and Retain Bottom Portion for Your Records.

TO BE COMPLETED BY SPECIMEN SUBMITTER

Subject (Last, First, Initial)	Time Specimen Obtained: ☐ A.M. ☐ P.M.	Date Specimen Obtained: ___/___/___ (Month/Day/Year)
Specimen Sealed By (Last, First, Initial)	Time Specimen Sealed: ☐ A.M. ☐ P.M.	Date Specimen Sealed: ___/___/___ (Month/Day/Year)

CHECK EACH STEP PERFORMED

NOTE: If submitting for **Drug Analysis Only** (not alcohol), begin with STEP 3.

STEP 1 ☐ Instruct the subject to void.
STEP 2 ☐ Establish a minimum 20 minute waiting period.
STEP 3 ☐ Open an intact kit.
STEP 4 ☐ Observe white powder in the specimen container.
STEP 5 ☐ Collect the sample directly into the specimen container. Do not discard powder. Transferring of sample from one receptacle to another is not recommended.
STEP 6 ☐ Instruct the subject to fill the specimen container to about ¾ full. Take necessary precautions to avoid contamination.
STEP 7 ☐ Fill in the label and place it over the top and down the sides of the specimen container.
STEP 8 ☐ Insert the specimen container into the Ziploc bag provided and seal the bag.
STEP 9 ☐ Insert the completed top portion of this form into the kit box.
STEP 10 ☐ Place the bag containing the specimen in the kit box.
STEP 11 ☐ Close the kit box and seal it with the kit box shipping seal provided.
STEP 12 ☐ Complete the return address on the kit box top.

I Certify That All Information Given in This Section is True and Correct.

Signed

Margaret A Benson 9 March 2004

IF SENDING BY MAIL, AFFIX POSTAGE.

UCOND: SUB.3 11/03

Completed Submission for Urine Form (104-U) (Page Two):

SUBMISSION FOR URINES (104-U)
OFFICE OF ATTORNEY GENERAL, CRIME LABORATORY DIVISION
2635 East Main Avenue, P.O. Box 937
Bismarck, ND 58502-0937 • (701) 328-6159
SFN 50159 (12-03)

PLEASE PRINT ALL INFORMATION

Subject (Last, First, Initial): Olson, Marie Z.	Birth Date: 09/14/67 (Month/Day/Year)	Weight: 156	Sex: ☐ Male ☒ Female
Check One: ☒ Arrested for DUI/APC ☐ Personal Request ☐ Other (Specify)	Driver's License Number: 123-12-1234		State: ND
Specimen: ☒ Urine ☐ Other (Specify)	Analysis Requested: ☐ Alcohol ☒ Drug Screen ☒ THC Only	Suspected Drugs: Stimulant	
Time Specimen Obtained: 11:45 ☐ A.M. ☒ P.M.	Date Specimen Obtained: 05/30/04 (Month/Day/Year)	County of Arrest: Burleigh	
Specimen Submitted By (Name): Off Trina Klautz		Submitting Agency: Our Town PD	
Submitting Agency Address: PO Box 45	City: Our Town	State: ND	Zip Code: 58999
Remarks: observed Subject			

FOR LABORATORY USE – DO NOT WRITE IN THIS SPACE

Laboratory Case Number:	Received: ☐ In a Sealed Container ☐ In a Labeled Urine Container	
Specimen Received From: ☐ P.O. Box Delivery ☐ Other (Specify)	Specimen Received By (Name):	
Time Specimen Received: ☐ A.M. ☐ P.M.	Date Specimen Received: / / (Month/Day/Year)	Remarks

Arresting Officer: Tear Along the Perforation and Retain Bottom Portion for Your Records.

TO BE COMPLETED BY SPECIMEN SUBMITTER

Subject (Last, First, Initial): Olson, Marie Z.	Time Specimen Obtained: 11:45 ☐ A.M. ☒ P.M.	Date Specimen Obtained: 05/30/04 (Month/Day/Year)
Specimen Sealed By (Last, First, Initial): Olson, Marie Z.	Time Specimen Sealed: 11:50 ☐ A.M. ☒ P.M.	Date Specimen Sealed: 05/30/04 (Month/Day/Year)

CHECK EACH STEP PERFORMED

NOTE: If submitting for **Drug Analysis Only** (not alcohol), begin with STEP 3.

STEP 1 ☒ Instruct the subject to void.
STEP 2 ☒ Establish a minimum 20 minute waiting period.
STEP 3 ☒ Open an intact kit.
STEP 4 ☒ Observed white powder in the specimen container.
STEP 5 ☒ Collect the sample directly into the specimen container. Do not discard powder. Transferring of sample from one receptacle to another is not recommended.
STEP 6 ☒ Instruct the subject to fill the specimen container to about ¾ full. Take necessary precautions to avoid contamination.
STEP 7 ☒ Fill in the label and place it over the top and down the sides of the specimen container.
STEP 8 ☒ Insert the specimen container into the Ziploc bag provided and seal the bag.
STEP 9 ☒ Insert the completed top portion of this form into the kit box.
STEP 10 ☒ Place the bag containing the specimen in the kit box.
STEP 11 ☒ Close the kit box and seal it with the kit box shipping seal provided.
STEP 12 ☒ Complete the return address on the kit box top.

I certify that all information given in this section is true and correct.

Signed: Trina Klautz #221

IF SENDING BY MAIL, AFFIX POSTAGE.

UCOND: SUB.2 11/03

FATAL ACCIDENT REPORTING SYSTEM

The National Highway Traffic Safety Administration (NHTSA) compiles data on all traffic crashes resulting in a fatality to provide an overall measure of highway safety. The NDCC 39-20-13 requires blood, urine, and vitreous humor specimen be drawn from all victims by the county coroner. The specimens are submitted to the Toxicology Section for analysis of alcohol, drug, and carbon monoxide content.

The highway safety program relies heavily on the support of law enforcement officers throughout the state to assist the coroners in collection of samples. Postmortem Analysis Kits are provided to all county coroners, NDHP troopers, and local law enforcement agencies, upon request. (Replacement kits are automatically sent out upon receipt of completed kits.)

All victims of the crash should be sampled. The drivers, passengers, pedestrians, ATV drivers, and bicyclists are studied as primary decision-makers in the accident. Passengers are analyzed to see if the "designated driver" program is working effectively. Children are analyzed as a check for compliance with the safety restraint program.

As you can see, the officer's investigation is a crucial component of this program. The report determines what role each victim plays in the accident.

The NHTSA uses a benchmark of 80-85 percent of all fatal drivers that should be sampled for the state to be in compliance with the program. North Dakota analyzed samples from only one-third (33/86) that number in 2000. The other samples were not collected/sampled. We are asking all law enforcement officers to help North Dakota to come in compliance with this federal program.

The law is specific that the results of the analysis are to be used for statistical purposes only. **Therefore, if the coroner or officer wishes to receive a copy of the analysis, BOTH the Toxicology Traffic Fatality Study and Coroner Request for Toxicological Analysis forms must be completed**. This will alert the toxicology staff that this is part of an ongoing criminal investigation.

Following is a copy of the instruction sheet included with each Post Mortem kit:

Postmortem Analysis Kit Instruction Sheet (Page One):

Postmortem Analysis Kit Instruction Sheet
Office of Attorney General, Crime Laboratory Division
2635 East Main Avenue, P.O. Box 937
Bismarck, ND 58502-0937 • (701) 328-6159

Return samples to the Office of Attorney General, Crime Laboratory, using the following form(s):

1. If this is a traffic fatality (vehicular crash involving a driver, passenger, pedestrian, or bicyclist), use the BLUE form labeled "Toxicology Traffic Fatality Study" mandated by North Dakota Century Code 39-20-13.
2. For investigating cause of death, use YELLOW form labeled "Coroner Request for Toxicological Analysis."

A) This kit is designed for the collection and transport of blood, urine, and vitreous specimens from **DECEASED** subjects only.

B) Read the entire instruction sheet prior to specimen collection.

C) **In order to obtain results on a Toxicology Traffic Fatality Study sample submitted, the Corner Request for Toxicological Analysis form must also be completed.**

STEP 1 Fill out all information legibly as requested on the appropriate form.

STEP 2 Fill out all information requested on the five (5) Specimen Security Seals supplied.

STEP 3 BLOOD COLLECTION
Using one of the 10 ml syringes and 16 g x 4" needles supplied, withdraw blood from the decedent and then transfer the blood into the gray- and green-stoppered tubes and one of the two red-stoppered tubes provided. Affix Specimen Security Seals to all of the tubes.

Immediately after blood collection, assure proper mixing of anticoagulants by slowly and completely inverting the blood tubes at least five (5) times. **Do not shake vigorously!**

STEP 4 URINE COLLECTION
Using another syringe and 16 g x 4" needle, withdraw 40 ml of urine from the decedent and then transfer the urine to the green-capped, plastic, specimen tube provided which contains 500 mg of sodium fluoride. Tighten down the cap to prevent leakage in transit and affix a Specimen Security Seal to the urine specimen tube.

STEP 5 VITREOUS FLUID COLLECTION
Using the remaining syringe and 18 g x 1-½" needle, withdraw fluid from the decedent and transfer the fluid to the remaining 10 ml, red-stoppered tube provided. Affix the remaining Specimen Security Seal to the tube.

(OVER)

PM0ND: INFDA1.2 10/03

Post Mortem Kit Instruction Form (Page Two):

A) Return all labeled specimen tubes to the gray, foam, tube holder and insert the holder in the Ziploc bag provided. Seal the bag. **DO NOT REMOVE THE LIQUID ABSORBING SHEET FROM THE ZIPLOC BAG.**

B) Place the sealed bag containing the specimens in the kit box along with the completed forms(s).

C) Discard used needles and syringes following OSHA guidelines. **DO NOT RETURN USED/UNUSED NEEDLES OR SYRINGES TO THE KIT BOX.**

D) **COMPLETE AND ATTACH THE ADDRESS LABEL TO THE BOX TOP.**

E) Close the kit box lid and **AFFIX THE KIT SHIPPING SEAL** where indicated.

F) Mail- or hand-deliver the sealed kit to the Office of Attorney General, Crime Laboratory Division, as soon as possible.

Important Information Regarding PM-0ND

Intended Use:

- Postmortem specimen collection and transport

Contents:

- Forms:
  a) Postmortem Analysis Kit Instruction Sheet
  b) Coroner Request for Toxicological Analysis
  c) Toxicology Traffic Fatality Study
- Gray foam tube holder
- Three (3), 10 ml, disposable syringes
- Two (2), 16 g X 4", needles (sterile)
- One (1), 18 g X 1-1/2", needle (sterile)
- Two (2), 10 ml, red-stoppered, blood collection tubes
- One (1), 10 ml, green-stoppered, blood collection tube containing sodium heparin
- One (1), 10 ml, gray-stoppered, blood collection tube containing 100 mg of sodium fluoride and 20 mg of potassium oxalate
- One (1), 50 ml, green-capped, urine specimen tube containing 500 mg of sodium fluoride
- One (1), 8" X 8", Ziploc bag with biohazard label attached and containing a liquid absorbing sheet
- Five (5) specimen security seals
- One (1) kit shipping seal
- One (1) address label

Warnings and Precautions:

Specimen samples should be handled and processed as if they are potentially infectious.

Waste Disposal Instructions:

- **Needles:** Dispose of any needles in an approved Sharps container.
- **Blood Tubes and Specimen Containers:** Dispose of all tubes and containers using safe laboratory procedures as outlined in bio-safety, microbiological, and bio-medical laboratories as HH Publication CDC 84-8395.

This product information sheet is included to comply with FDA Regulations

PM0ND: INFDA2.3 6/04

Post Mortem Kit Seals:

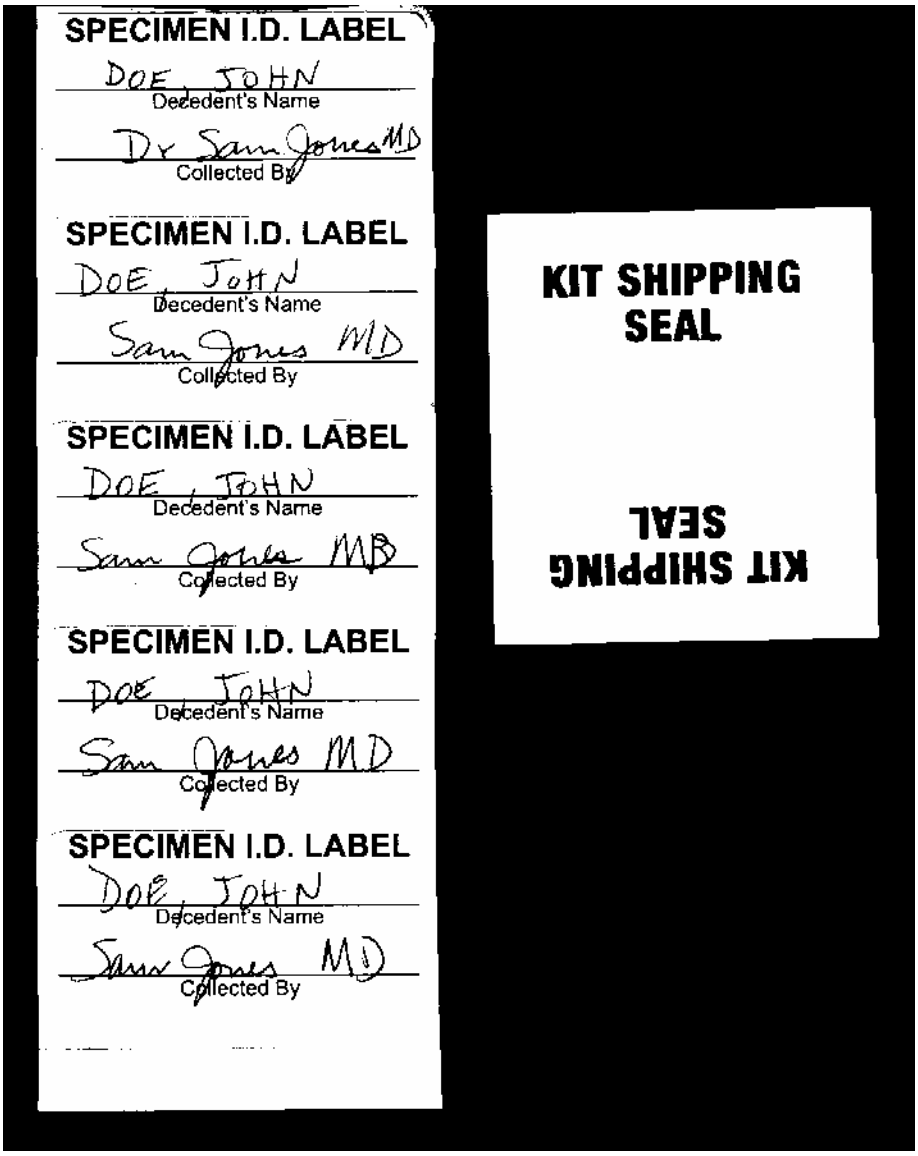

Figure 3

Coroner Request for Toxicological Analysis Letter of Certification (Page One):

State of North Dakota)
)ss
County of Burleigh)

I, Margaret A. Pearson, do hereby certify that I am a duly-appointed State Toxicologist for the State of North Dakota and an official custodian of the records and files of the office thereof, that I have carefully compared the **Coroner Request for Toxicological Analysis (PM0ND: CRTA.5 6/04)** hereto attached with the respective original as the same appears of record on file in the Toxicology Laboratory in the County of Burleigh, North Dakota, and find the same to be a true and correct copy thereof and of the whole thereof. In witness whereof I have set my hand at the city of Bismarck, in said county this:

11th day of August, 2004

Margaret A. Pearson

Margaret A. Pearson, State Toxicologist

State of North Dakota)
)ss
County of Burleigh)

On this 11 day of August, 2004, before me personally appeared Margaret A. Pearson, known to me to be a State Toxicologist for the State of North Dakota, acknowledged to me that she has executed the same.

Subscribed to and sworn before me this:

4 day of August, 2004

CINDY LEINGANG
Notary Public, STATE OF NORTH DAKOTA
My Commission Expires JANUARY 11, 2005

Cindy Leingang

Cindy Leingang, Notary Public, State of North Dakota
My Commission Expires January 11, 2005 (SEAL)

Uncompleted Coroner Request for Toxicological Analysis (Page Two):

Coroner Request for Toxicological Analysis

Office of Attorney General, Crime Laboratory Division
2635 East Main Avenue, P.O. Box 937
Bismarck, ND 58502-0937 • Tel. (701) 328-6159
SFN 50494 (6/04)

Decedent Name: _____
Last First Middle Initial

☐ Male ☐ Female Date of Birth: _____ Date of Death: _____

*Social Sec.: _____ Driver's License: _____ State: _____

Specimens Collected: Date: _____ Time: _____

Specimens Obtained By: _____

Replacement Coroner Kit Sent To: _____

*NOTE: In compliance with the Federal Privacy Act of 1974, the disclosure of the individual's social security number on this form is voluntary pursuant to North Dakota Century Code. The individual's social security number is used within our department as an identification number for file control purposes and record keeping.

Specimens Submitted:
- ☐ Blood (Gray-Stoppered Tube)
- ☐ Blood (Green-Stoppered Tube)
- ☐ Blood (Red-Stoppered Tube)
- ☐ Vitreous (Red-Stoppered Tube)
- ☐ Urine (Large, Green-Capped Plastic Tube)
- ☐ Other: _____

Venipuncture Site: _____

Analysis Required (Check All Required):
- ☐ Blood Alcohol
- ☐ Blood Carbon Monoxide
- ☐ Blood Drug Screen
- ☐ Urine Drug Screen
- ☐ Other (Gastric, Liver, Etc.): _____

Drugs Suspected: _____

Medications Used: _____

Suspected Cause of Death: _____

Law Enforcement Agency and Investigator Involved: _____

For Lab Use Only:

Case No.: _____

Specimen Received:
- ☐ In a Sealed Postmortem Kit
- ☐ Via Postal Delivery
- ☐ In a Sealed Bio Bag
- ☐ Via Other _____

at _____ on _____
(Time) (Date)

By: _____

Remarks: _____

Send Lab Report To:

Print Name: _____
Agency: _____
Address: _____

Chain of Custody Receipt:
(To Be Completed By Each Person In Custody of Specimen)

Signature	Agency	Hour	Date

Margaret A Pearson 11 August 2004

PMOND: CFTA.5 6/04

Completed Coroner Request for Toxicological Analysis (Page Two):

MUST BE COMPLETED TO RECEIVE A WRITTEN REPORT

Coroner Request for Toxicological Analysis
Office of Attorney General, Crime Laboratory Division
2635 East Main Avenue, P.O. Box 937
Bismarck, ND 58502-0937 • (701) 328-6159
SFN 50494 (9/05)

Decedent Name: DOE (Last) JANE (First) A. (Middle Initial)

☐ Male ☒ Female Date of Birth: 11/11/1959 Date of Death: 09/01/2004

*Social Security: 999-99-9998 Driver's License: D0999999 State: ND

Specimens Collected: Date: 09/02/2004 Time: 12:15 pm

Specimen Obtained By: O.K. Coroner, MD

Replacement Coroner Kit Sent To: SAME

*NOTE: In compliance with the Federal Privacy Act of 1974, the disclosure of the individual's social security number on this form is voluntary pursuant to North Dakota Century Code. The individual's social security number is used within our department as an identification number for file control purposes and record keeping.

Specimens Submitted:	Analysis Required (Check All Required):
☒ Blood (Gray-Stoppered Tube)	☒ Blood Alcohol
☒ Blood (Green-Stoppered Tube)	☒ Blood Carbon Monoxide
☒ Blood (Red-Stoppered Tube)	☒ Blood Drug Screen
☐ Vitreous (Red-Stoppered Tube)	☒ Urine Drug Screen
☒ Urine (Large, Green-Capped Plastic Tube)	☐ Other (Gastric, Liver, Etc.):
☐ Other:	
Venipuncture Site: AORTA	

Sample Disposal Will Occur 12 Months After Analysis Reporting Date

Drugs Suspected: NONE

Medications Used: UNKNOWN

Suspected Cause of Death: MVA - Blunt Force Trama

Law Enforcement Agency & Investigator Involved: Off McGruff

For Lab Use Only:

Case No.:

Specimen Received:
☐ In a Sealed Postmortem Kit
☐ Via Postal Delivery
☐ In a Sealed Bio Bag
☐ Via Other

at (Time) on (Date)

By:

Remarks:

Send Lab Report To:

Print Name: O.K. Coroner, M.D.
Agency: LOCAL Clinic
Address: Our Town, ND 58999

Copy: OFF McGruff, Our Town

Chain of Custody Receipt:

(To Be Completed By Each Person In Custody of Specimen)

Signature	Agency	Hour	Date
O.K. Coroner	Our Town Clinic	12:15	9-2-04

PMOND: CRTA.7 9/05

Toxicology Traffic Fatality Study Letter of Certification (Page One):

State of North Dakota)
)ss
County of Burleigh)

I, Margaret A. Pearson, do hereby certify that I am a duly-appointed State Toxicologist for the State of North Dakota and an official custodian of the records and files of the office thereof, that I have carefully compared the **Toxicology Traffic Fatality Study (PM0ND: TTFS.6 6/04)** hereto attached with the respective original as the same appears of record on file in the Toxicology Laboratory in the County of Burleigh, North Dakota, and find the same to be a true and correct copy thereof and of the whole thereof. In witness whereof I have set my hand at the city of Bismarck, in said county this:

11th day of August, 2004

Margaret A. Pearson

Margaret A. Pearson, State Toxicologist

State of North Dakota)
)ss
County of Burleigh)

On this 11 day of August, 2004, before me personally appeared Margaret A. Pearson, known to me to be a State Toxicologist for the State of North Dakota, acknowledged to me that she has executed the same.

Subscribed to and sworn before me this:

11 day of August, 2004

CINDY LEINGANG
Notary Public, STATE OF NORTH DAKOTA
My Commission Expires JANUARY 11, 2005

Cindy Leingang

Cindy Leingang, Notary Public, State of North Dakota
My Commission Expires January 11, 2005 (SEAL)

Uncompleted Toxicology Traffic Fatality Study (Page Two):

Toxicology Traffic Fatality Study

Office of Attorney General, Crime Laboratory Division
2635 East Main Avenue, P.O. Box 937
Bismarck, ND 58502-0937 • Tel. (701) 328-6159
SFN 53219 (6/04)

Decedent's Name: _____
Last First M.I.

Address: _____

*Social Sec.: _____

Driver's License.: _____ State: _____

Date of Birth: ____/____/____ Sex: ☐ Male ☐ Female
Month Day Year

Occupation: _____

*NOTE: In compliance with the Federal Privacy Act of 1974, the disclosure of the individual's social security number on this form is voluntary pursuant to North Dakota Century Code. The individual's social security number is used within our department as an identification number for file control purposes and record keeping.

For Lab Use Only:

Case No.: _____

Specimen Received:
☐ In a Sealed Postmortem Kit
☐ Via Postal Delivery
☐ In a Sealed Bio Bag
☐ Via Other: _____
at _____ on _____
(Time) (Date)

By: _____

Remarks: _____

	Hour	Month	Day	Year
Time and Date of Accident				
Time and Date of Death				
Time and Date of Specimen Collection				

Venipuncture Site: _____

Decedent Was: ☐ Driver ☐ Suspected Driver ☐ Occupant ☐ Pedestrian ☐ Other: _____

Name and Address of Sample Collector:

Send Replacement Postmortem Kit To:

Margaret A Pearson 11 August 2004

PMOND:TTFS.6 6/04

Completed Toxicology Traffic Fatality Study (Page Two):

Toxicology Traffic Fatality Study
Office of Attorney General, Crime Laboratory Division
2635 East Main Avenue, P.O. Box 937
Bismarck, ND 58502-0937 • (701) 328-6159
SFN 53219 (9/05)

Decedent's Name: DOE (Last) JANE (First) A. (M.I.)

Address: Our Town, ND

*Social Security: 999-99-9999

Driver's License: D0999999 State: ND

Date of Birth: 11 / 11 / 1959 (Month Day Year) Sex: □ Male ☒ Female

Occupation: CHEMIST

*NOTE: In compliance with the Federal Privacy Act of 1974, the disclosure of the individual's social security number on this form is voluntary pursuant to North Dakota Century Code. The individual's social security number is used within our department as an identification number for file control purposes and record keeping.

For Lab Use Only:

Case No.: _____

Specimen Received:
□ In a Sealed Postmortem Kit
□ Via Postal Delivery
□ In a Sealed Bio Bag
□ Via Other _____

at _____ (Time) on _____ (Date)

By: _____

Remarks:

	Hour	Month	Day	Year
Time and Date of Accident	11:00A	9	1	2004
Time and Date of Death	1:12P	9	1	2004
Time and Date of Specimen Collection	12:15P	9	2	2004

Decedent Was: □ Driver ☒ Suspected Driver □ Occupant □ Pedestrian □ Other: _____

Venipuncture Site: AORTA

Name and Address of Sample Collector:
OK Coroner, MD
LOCAL Clinic
Our Town, ND
58999

Send Replacement Postmortem Kit To:
← SAME
Send Extra Kit to:
Tr Smith, NDHP
NDHP - Bismarck, ND

PMOND: TTFS.8 9/05

TIPS ON TESTIFYING AND CASE PREPARATION

GENERAL RULES FOR IN-COURT DEMEANOR

1. Dress conservatively.

2. Remember, when approaching or inside the courthouse, anyone you pass may be a judge, hostile witness, or opposing attorney. Always conduct yourself accordingly.

3. Do not discuss the case with anyone. Do not discuss the case or your testimony with opposing lawyers, their assistants, or **anyone else** (other than your attorney) during breaks and lunch. If the court takes any breaks, you should follow your lawyer to a private place to discuss any matters necessary.

4. Be prepared for sequestration (that is, being excluded from the courtroom except when you are testifying).

5. When you enter the courtroom to testify, do not do anything immediately (that is, wait for direction). Before sitting down in the witness box, make brief eye contact with the judge. Adjust the chair and microphone so you don't have to lean forward to answer questions.

GENERAL RULES FOR TESTIFYING

1. Tell the truth.

2. Be courteous. Being courteous is one of the best ways to make a good impression on the court. Be sure to address the judge as "Your Honor."

3. Avoid joking, wisecracks, and condescending comments or inflections. A trial is a serious matter.

4. Be prepared.

5. Do not bring notes, books, etc., with you to the hearing or trial (**unless your lawyer has okayed this during your pre-trial preparation**). If you relied on the notes, books, etc., in refreshing your recollection, they can be taken from you and the other side can cross-examine you about them.

6. Speak clearly and loudly.

7. Talk loudly enough so everyone can hear you, yet softly enough so that you can suddenly raise your voice to emphasize a point (e.g. “No sir, I am **not lying**”). Vary the speed of delivery and volume to avoid monotone presentations.

8. Avoid distracting mannerisms such as eating mints, chewing gum, rattling coins or keys, or fumbling through a file.

9. Listen carefully to every question. **Pause before answering**.

10. Answer only the questions you are asked.

11. Recognize the purpose of your testimony. Remember that purpose in answering all questions.

12. Answer the questions with the words you normally use and feel comfortable with. Do no use someone else’s vocabulary or other stilted speech. Avoid using professional jargon. Avoid “bureaucratese” or government abbreviations lay people may not know. Review your testimony with the attorney and identify the difficult words. Use a thesaurus to find simple and clear alternative words that the judge will understand.

13. Choice of words is very important.

    A) Develop your ability to use words that not only depict the facts, but also convey the impression you intend (e.g., use the word “differences” instead of “disparities”).

    B) Use good grammar.

    C) Avoid use of intensifiers (e.g., “very poor eye contact” and “extremely belligerent”).

14. Always maintain the appearance of being absolutely fair and objective. (That does not mean that you should volunteer facts or opinions that will hurt our case.)

15. Be aware of body language and, if possible, use it to your advantage.

    A) Use of space affects how powerful one is perceived to be.

    B) Avoid nonverbal indicators of deception.

    C) Maintain good eye contact with the judge/lawyer.

16. Give an audible answer so the court reporter can hear it. Don't nod your head yes or no. Remember the court reporter is writing everything you say for appellate review.

17. Don't look at your lawyer or the judge for help when you are on the witness stand. You are on your own.

18. You generally will be allowed to testify only to what you personally said, heard, or did. You usually cannot testify as to what others may know, conclusions, opinions, and speculations.

19. Most people learn visually. Use blackboards, diagrams, charts, etc., liberally. At the blackboard or easel, turn around and talk to the judge. Almost inevitably witnesses not following this instruction will get into an inaudible conversation with the blackboard.

20. Before drawing anything—think! Don't start with the old cliché, "Well, I am not much of an artist." Draw in proportion and never refer to "here" and "there." A reviewing court will not understand what you mean. Describe what you draw orally and number each relevant representation.

21. Never read from notes unless absolutely necessary. If you must, announce the fact that you are doing so and state your reason (e.g., refreshing memory, need for specificity, etc.). The lawyer cross-examining you will have a right to see the notes at that time.

POINTERS FOR CROSS-EXAMINATION

1. Before answering each question, control the situation by consciously pausing. This allows the judge to mentally shift from hearing the attorney's question to listening to your answer and permits the interjection of an objection. For example:

   A) State your name and occupation. (Use a three-count pause.)

   B) My name is _____. I am a social worker for the _____.

   C) How long have you been employed? (Use a three-count pause.)

   D) I have been working there for _____ years.

2. Answer the question that is asked and then stop. **Don't volunteer information not called for by the question you are asked.**

3. Beware of the interrogator's inquisitive stare; that is, when he or she just stares or pauses after you have answered a question, hoping you will elaborate.

4. Avoid a rapid question/answer conversation with the interrogator. He or she may want to put you at ease and get you to agree with his or her version of the facts.

5. Answer each question with a declarative statement rather than one word or phrase. The opposing attorney may only want the judge to hear his/her question. By using the three count pause, the declarative sentence and spatial positioning you will take psychological control away from the attorney.

6. Is the questioner putting words in your mouth with leading questions? If so, correct the wording or use your own wording in your answer.

7. If you cannot answer a question by "yes" or "no," say so and explain your answer. However, give positive, clear, and direct answers to every question whenever possible.

8. When answering questions, don't guess. If you don't know, say you don't know. Don't let the cross-examiner get you in the trap of answering question after question with "I don't know."

9. Listen and try to avoid asking the lawyer to repeat the question. However, if you do not hear or do not understand the question, feel free to ask the lawyer to repeat the question or state that you do not understand the question.

10. Keep a sharp lookout for questions with a double meaning and questions which assume you have testified to a fact when you have not done so (e.g., "Have you stopped beating your wife").

11. Treat questions on important matters with caution. Ponder the question, especially the interrogator's choice of words (e.g., "Do you **always** . . ."). Watch for buzzwords such as "uniform, significant, disparity, equitable, inequitable, and important."

12. If your lawyer objects, listen to the objection carefully. The objection may alert you to the problem with the question or your answer.

13. Never try to squeeze an answer in when an objection has been made.

14. **If a judge "sustains" an objection, that means you do not have to answer the question**. Sit quietly and wait for the next question. **If the judge "overrules" an objection, you have to answer the question**. If you have forgotten the question at that point, say so and the question will be repeated. Do not guess at what the question was if you do not remember.

15. Beware of questions involving specific dates or dollars. If you make an estimate, make sure that everyone understands that you are estimating. Be sure your estimates are reasonable.

16. Don't argue with the lawyer cross-examining you. She/he has every right to question you and the lawyer who called you will object if opposing counsel gets out of bounds.

17. Don't answer a question with a question unless the question you are asked is not clear. The judge expects counsel to ask tough questions and to be overbearing at times.

18. Don't lose your temper no matter how hard you are pressed. If you lose your temper, you have played right into the hands of the cross-examiner.

19. If asked whether you have talked to the lawyer calling you as a witness, readily admit that you had a conference with your attorney and that he or she advised you to tell the truth, listen carefully, etc. If you are being paid a fee, admit you are receiving compensation without hesitation.

20. Be reluctant to express opinions in areas outside your expertise. Be careful not to second guess what other people did and why. It is easy to have 20/20 hindsight, but without knowing all the factors surrounding another person's actions, such retroactive analysis is speculative and you are not required to guess.

21. Be careful of hypothetical questions constructed to be analogous to the facts of the case but slanted with the interrogator's view. If the facts given in the question are not portrayed **exactly** as you know the situation to be, explain that you cannot answer because you do not have enough essential information in the hypothetical to answer it correctly. Be prepared, however, to supply the needed information.

22. After you have answered, explain or rephrase your answer only to correct an error or obvious misunderstanding.

23. If you are asked about a document, look at the whole document. Look at its effective date, who authored it, and whether it is complete. Do not testify from out-of-date manuals.

    A) Consider whether a passage the lawyer is referring to in a document is being taken out of context. Be careful in explaining "why" a document was prepared.

B) If asked to mark a map, photograph, or diagram; draw large circles, brackets, etc. Do not pin yourself down if there is a possibility of inaccuracy.

24. Remember to answer the question in the appropriate time frame (e.g., procedures at the time of the incident versus current procedures).

25. When you finish testifying, nod to the judge, say thank you, and leave the courtroom, avoiding exchange with others on your way out.

26. Above all, always tell the complete truth according to your best recollection of the facts and events involved.

North Dakota DUI Law Flow Chart:

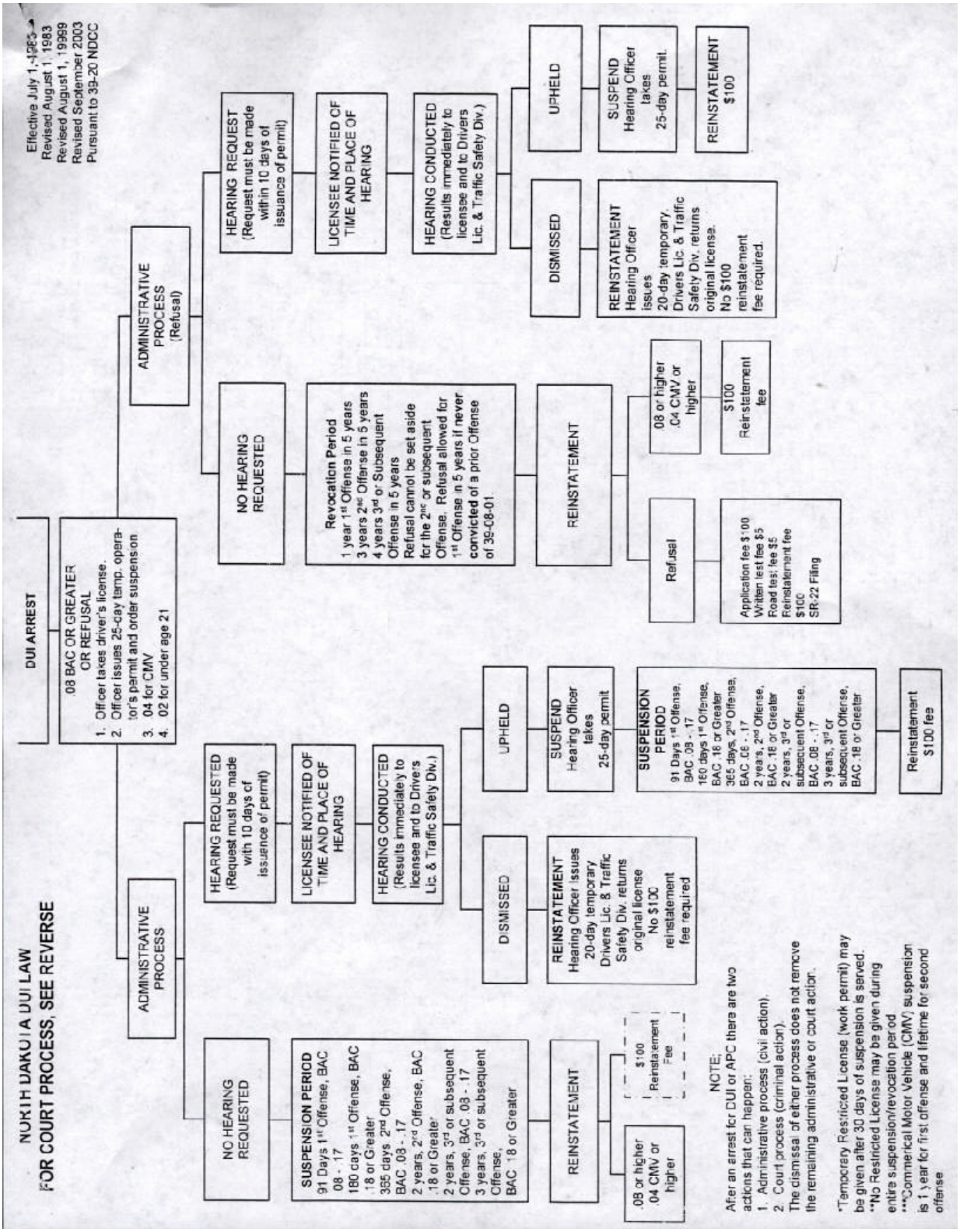

Chart 1

North Dakota DUI Court Process Law Flow Chart:

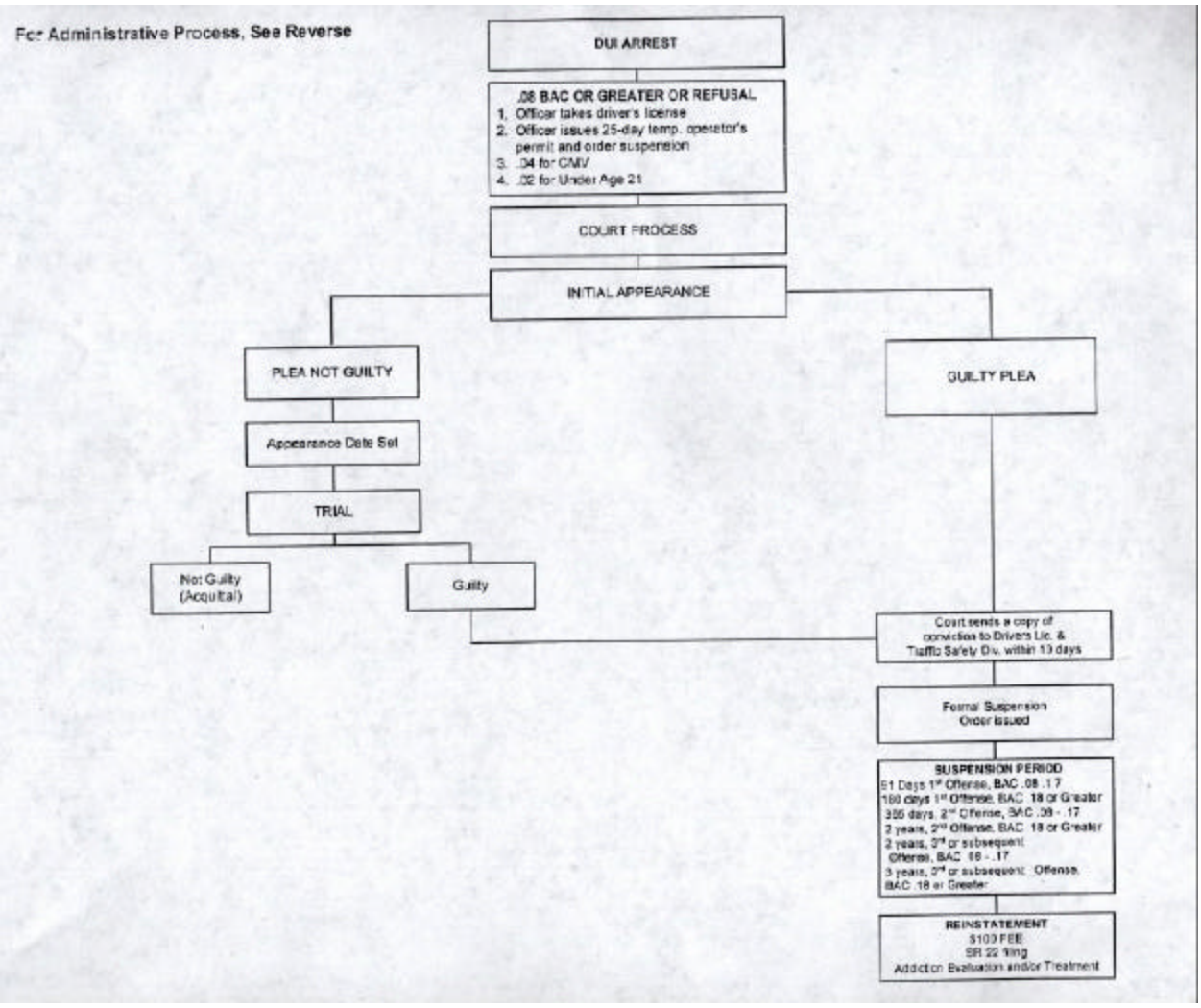

Chart 2

North Dakota DUI Graduated Drivers License Flow Chart:

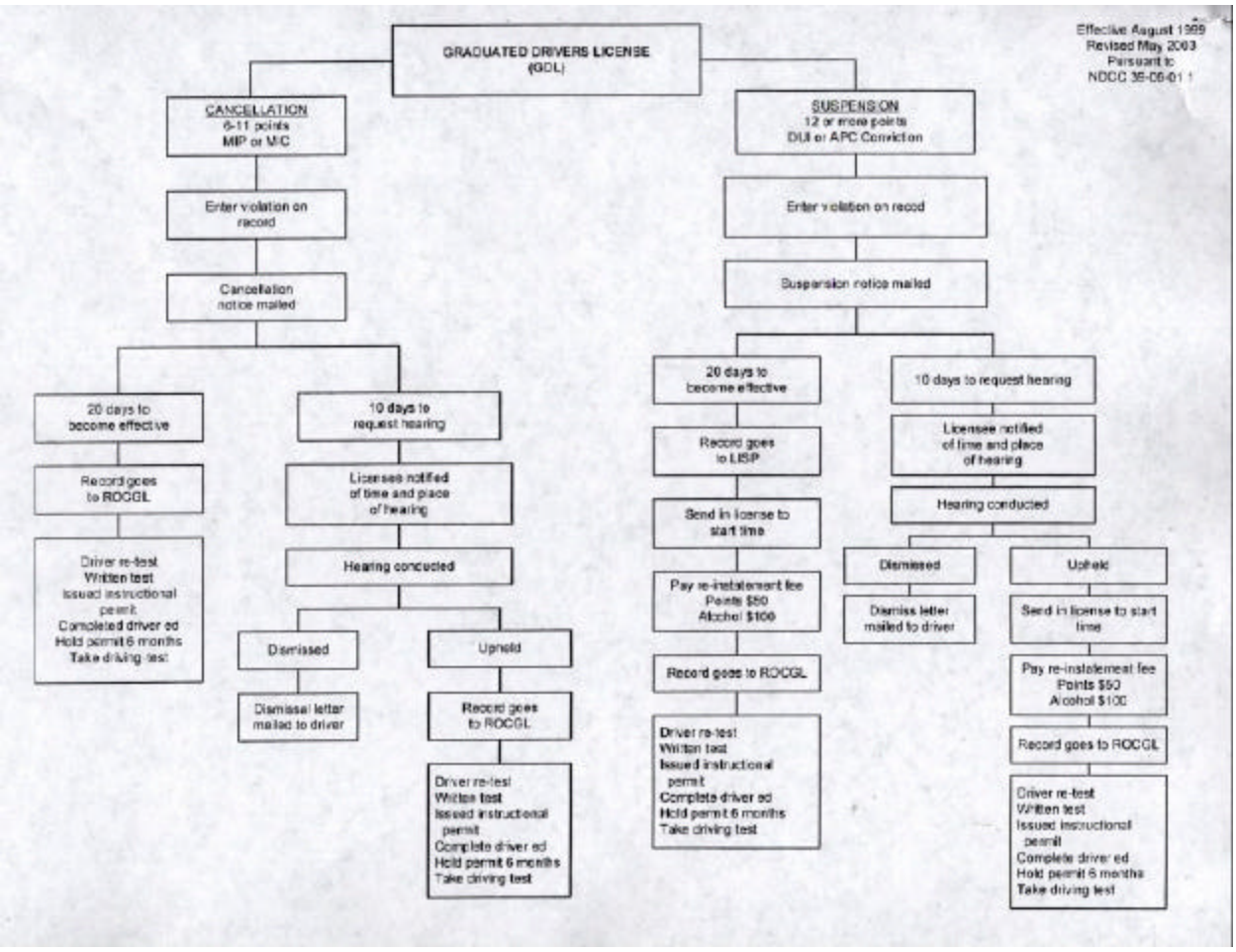

Chart 3

REQUEST FOR SUBPOENA AND/OR HEARING NOTICE

DIRECTIONS

Use this form to request that a subpoena be issued to or that a hearing notice be sent to someone for a NDDOT hearing. If possible, submit this request along with the Report and Notice (see following example) or Request for a Hearing form. A subpoena request can be made later, but delay in making the request could make service of a subpoena difficult or impossible prior to the administrative hearing. **Please print or type legibly on all forms**.

CASE IDENTIFICATION

Name of Driver _____
Operator's License Number _____
Driver's Date of Birth _____
Date of Occurrence _____
Date of Issuance of Report and Notice _____

REQUEST MADE BY

Name _____
Agency _____ (NDHP, Police Department, or County SO)
Address _____
Telephone Number _____
Fax Number _____

I request that _____ a notice of administrative hearing under NDCC 39-20_____ a subpoena be sent to the following individual:
Name _____ Address _____

REASON FOR REQUEST

_____ Witness to accident; may have information about time of accident
_____ Nurse/medical technician who drew blood; Form 104 is incomplete or unclear
_____ Intoxilyzer operator; Form 106-I is incomplete or unclear
_____ Other (please explain)

If a subpoena has been requested, will service of the subpoena be necessary?
Note: hearing notices and subpoenas will be mailed unless formal service is requested. The NDDOT will not pay fees or expenses for witnesses requested by the petitioner or by the petitioner's attorney.

Date of request _____
Signature of person submitting request _____

Report and Notice Under Chapter 39-20 or 39-06.2 NDCC Form (Page One):

REPORT AND NOTICE UNDER CHAPTER 39-20 OR 39-06.2 NDCC
North Dakota Department of Transportation, Drivers License & Traffic Safety Division
SFN 9362 (Rev. 08-2003)

Date of Occurrence	Time of Driving/Physical Control/Crash ☐A.M.☐P.M.	Time of Arrest/Lawfully Detained ☐A.M.☐P.M.	Citation Number

Name (Last, First, and Middle)

Residence Address	City	State	Zip Code

Area Code & Phone Number	County of Occurrence	City of Occurrence	Enforcement Agency

DLN	State	Date of Birth	Class	Endorsement	Rest Code	Sex	Height	Weight

On the above date, there existed reasonable ground to believe that the above-named person was operating:
☐ Non-Commercial motor vehicle
☐ Commercial motor vehicle (CMV)
☐ CMV transporting hazardous materials, in violation of NDCC section 38-08-01 or 39-06.2-10.2

The above named person:
☐ Was advised according to the law enforcement implied consent advisory on the bottom portion of the driver's copy of this notice
☐ Refused onsite screening test (NDCC section 39-20-14 or 39-06.2-10.2)

☐ Was placed under arrest and informed that he or she will be charged with the offense of driving or being in actual physical control of a vehicle while under the influence of intoxicating liquor, or drugs.
☐ Was lawfully detained and officer has probable cause to believe that the driver was operating a CMV, or under twenty-one (21) years of age, while having alcohol or drugs in his or her system.

Location of Arrest or Where Detained

☐ Refused under NDCC, Section 39-20-01 or 39-06.2-10.2 a chemical test or tests of ☐BLOOD ☐BREATH ☐URINE
☐ Provided specimen of ☐BLOOD ☐BREATH ☐URINE for testing under NDCC Chapter 39-20 or 39-06.2-10.2 Time Obtained _____ ☐AM ☐PM Test Results _____
☐ Additional specimen of ☐BLOOD ☐BREATH ☐URINE Time Obtained _____ ☐AM ☐PM Test Results _____

TEMPORARY OPERATOR'S PERMIT: (To be issued to driver. Mark valid or not valid)

ND License/Permit attached? ☐Yes ☐No ☐Lost

This permit is: ☐ **VALID** as a Temporary Operators' Permit for 25 days from date of issue (unless terminated earlier by hearing officer).
☐ **NOT VALID** as a Temporary Operator's Permit because:
☐ Non-Licensed Driver
☐ License Suspended/Revoked
☐ Current permit under NDCC 39-06.2

☐ THIS PERMIT IS VOID UNLESS ACCOMPANIED BY THE NUMBERED CITATION SHOWN ABOVE.
☐ THIS PERMIT IS NOT VALID FOR OPERATING A CMV UNTIL _____ ☐AM ☐PM ON (MM/DD/CCYY) _____

I certify that I personally issued this Temporary Operator's Permit to the driver on MM/DD/CCYY _____

Name of Officer/Badge or ID Number (PLEASE PRINT) _____ Signature of Officer _____

OFFICER'S STATEMENT OF PROBABLE CAUSE: (Check appropriate boxes and explain.)

Reasonable suspicion to stop or reason lawfully detained:
☐ erratic driving Explain: _____
☐ traffic violation _____
☐ accident _____
☐ already stopped _____

Probable cause to arrest/lawfully detain:
☐ odor of alcoholic beverage Explain: _____
☐ poor balance _____
☐ failed field sobriety test(s) _____
☐ failed screening test _____

I personally certify as a law enforcement officer that this written report is true and correct to the best of my knowledge at the time of writing this report.
Dated this _____ day of (MM/CCYY) _____

Name of Officer/Badge or ID Number (PLEASE PRINT) _____
Signature of Officer/Badge or ID Number _____

LAW ENFORCEMENT IMPLIED CONSENT ADVISORY

NON-COMMERCIAL: Refusal to submit to onsite screening or chemical test(s) requested by a law enforcement officer will result in revocation of your driving privileges for up to four years.
COMMERCIAL: Refusal to submit to onsite screening or chemical test(s) requested by a law enforcement officer will result in being immediately placed out of service for a period of 24 hours and being disqualified from operating a commercial motor vehicle for a period of not less than one year under NDCC 39-06.2-10.

DRIVER LICENSE & TRAFFIC SAFETY DIVISION

Report and Notice Under Chapter 39-20 or 39-06.2 NDCC Form (Page Two):

SURRENDER OF LICENSE(S) OR PERMIT(S).
The law requires you to surrender all your North Dakota operator's licenses or permits to the law enforcement officer. If all North Dakota licenses or permits were not surrendered to the law enforcement officer, you must surrender these to the Drivers License and Traffic Safety Division. THE TIME CREDITED FOR SUSPENSION OR REVOCATION WILL NOT START UNTIL THE LICENSES OR PERMITS HAVE BEEN SURRENDERED OR UNTIL THE DATE YOU SUBMIT A WRITTEN NOTICE THAT YOU DO NOT HAVE A LICENSE.

SUSPENSION/REVOCATION INFORMATION.
Refusal to submit to onsite screening or a chemical test(s) will result in revocation of your driving privileges, dependent upon previous violations of NDCC 39-08-01, 39-06.2-10 or equivalent ordinance, for:
NON-COMMERCIAL: first offense - one year; second offense - three years; third or subsequent offense - 4 years.
COMMERCIAL: first offense - one year; first offense transporting hazardous material - three years; second or subsequent offense life time.

Consenting to test(s), with results of a blood alcohol content (BAC) indicating at least:
NON-COMMERCIAL:
First offense - BAC eight one-hundredths (.08) of one percent to seventeen one-hundredths (.17) by weight - 91 days; BAC eighteen one-hundredths (.18) of one percent or greater by weight - 180 days.
Second offense -BAC eight one-hundredths (.08) of one percent to seventeen one-hundredths (.17) by weight - 365 days; BAC eighteen one-hundredths (.18) of one percent or greater by weight - 2 years.
Third or subsequent offense within 5 years - BAC eight one-hundredths (.08) of one percent to seventeen one-hundredths (.17) by weight - 2 years; BAC eighteen one-hundredths (.18) of one percent or greater by weight - 3 years.
Fourth or subsequent offense within 7 years - BAC eight one-hundredths (.08) of one percent to seventeen one-hundredths (.17) by weight - 2 years; BAC eighteen one-hundredths (.18) of one percent or greater by weight - 3 years.
COMMERCIAL:
First offense - BAC four one-hundredths (.04) of one percent or greater by weight - 1 year; BAC four one-hundredths (.04) of one percent or greater by weight and transporting hazardous material - 3 years.
Second or subsequent offense - BAC four one- hundredths (.04) of one percent or greater by weight - lifetime.

You may, at your own expense, have a physician, or a qualified technician, chemist, registered nurse, or other qualified person of your own choosing administer a chemical test(s) in addition to any administered at the direction of a law enforcement officer. Your failure or inability to obtain an additional test shall not preclude the admission of the test(s) taken at the direction of the law enforcement officer. Upon your request, the law enforcement officer will make available to you a copy of the test record and checklist if applicable, or the analytical report, for the test or tests taken at the direction of the law enforcement officer.

REFUSAL GUILTY PLEA (NON-COMMERCIAL ONLY)
To shorten your time without driving privileges YOU MUST do all the following within 25 days.

1. Mail an affidavit to Drivers License & Traffic Safety Division confirming you will plead guilty to Driving Under the Influence or Actual Physical Control, accept the appropriate suspension, waive all administrative hearing rights, and understand a violation of these conditions will result in revocation of your driving privileges, AND
2. Your guilty plea is accepted by the court, AND
3. No administrative hearing may be held.

TEMPORARY RESTRICTED LICENSE (NON-COMMERCIAL ONLY)
A temporary restricted license (work permit) may be issued to first-time alcohol offenders, after serving 30 days of their suspension period. A temporary restricted license may NOT be issued to multiple offenders or when driving privileges are revoked as a result of a refusal to submit to a chemical test or onsite screening test. Applications for temporary restricted licenses must be completed on a form provided by Drivers License & Traffic Safety Division. (See NDCC 39-06.1-11 for more information).

REINSTATEMENT INFORMATION
You may not drive in North Dakota after your suspension or revocation period ends until you have provided the Drivers License & Traffic Safety Division with the following:

1. A $100 reinstatement fee,
2. Filed proof of financial responsibility (SR-22) when required in accordance with NDCC 39-16.1,
3. If your privilege was revoked for refusing an alcohol test, you must complete a new written application for license, successfully complete required operator license tests, and pay a fee for a new license in addition to the reinstatement fee.
4. If you are convicted or plead guilty in criminal court, the written certificate of an appropriate licensed addiction treatment program stating you do not require addiction treatment or that you have completed the treatment program prescribed as a result of your evaluation.

ADDITIONAL INFORMATION:
Address all inquires to: DRIVERS LICENSE & TRAFFIC SAFETY DIVISION
608 E BOULEVARD AVE
BISMARCK ND 58505-0700
Phone (701) 328-2600
TDD (701) 328-4156

List of Chemical Test Records:

STATE OF NORTH DAKOTA
OFFICE OF ATTORNEY GENERAL
STATE CAPITOL
600 E BOULEVARD AVE DEPT 125
BISMARCK, ND 58505-0040
(701) 328-2210 FAX (701) 328-2226
www.ag.state.nd.us

Wayne Stenehjem
ATTORNEY GENERAL

CRIME LABORATORY DIVISION
2635 EAST MAIN AVE., BOX 937
BISMARCK, ND 58502-0937
TEL. 701-328-6159
TOLL-FREE TEL. 800-296-2054
FAX 701-328-6185

MEMO TO: All Recipients of State Toxicologist Documents

FROM: Hope Olson, State Crime Laboratory Director

DATE: August 1, 2005

REGARDING: Records From the Office of the State Toxicologist

This memo concerns records filed with you by the Office of the State Toxicologist. The following list has been prepared to advise you as to the frequency of issue and the time each record should be kept in your files. If you need additional information, please feel free to contact me.

LIST OF CHEMICAL TEST RECORDS

Record Name	Issue	Retention
Approved Method for Operating the A.L.E.R.T.	As Needed	Permanent
Approved Method for Operating the Alco-Sensor	As Needed	Permanent
Approved Method for Operating the Intoxilyzer S-D2	As Needed	Permanent
Approved Method to Conduct Breath Test With Intoxilyzer 5000	As Needed	Permanent
Approved Method to Conduct Breath Test With Intoxilyzer 5000 KB	As Needed	Permanent
Approved Method to Conduct Breath Test With Intoxilyzer 5000 KB-EP	As Needed	Permanent
Approved Method 2 to Conduct Blood Alcohol Analysis	As Needed	Permanent
Coroner Request for Toxicological Analysis Form	As Needed	Permanent
Designation of the State Toxicologist	As Needed	Permanent
Designation of the Deputy State Toxicologist	As Needed	Permanent
Designees of the State Crime Laboratory Director	As Needed	Permanent
Intoxilyzer Test Record, Form 106-I	As Needed	Permanent
Intoxilyzer Test Record, Form 106-KB	As Needed	Permanent
List of Approved Chemical Testing Devices (and Supplements Thereof)	Annual	2 Years
List of Approved Designations of Individuals Medically Qualified to Draw Blood	As Needed	Permanent
List of Certified Chemical Test Operators (and Supplements Thereof)	Annual	2 Years
List of Individuals Certified to Conduct Blood Alcohol Analysis	As Needed	Permanent
Memorandums	As Needed	Permanent
Standard Solution Analytical Report	Monthly	2 Years
Submission for Blood, Form 104	As Needed	Permanent
Submission for Urine, Form 104-U	As Needed	Permanent
Toxicology Traffic Fatality Study Form	As Needed	Permanent

List of Approved Chemical Testing Devices Letter of Certification (Page One):

State of North Dakota)
)ss
County of Burleigh)

I, Margaret A. Pearson, do hereby certify that I am a duly-appointed State Toxicologist for the State of North Dakota and an official custodian of the records and files of the office thereof, that I have carefully compared the

LIST OF APPROVED CHEMICAL TESTING DEVICES (July 1, 2005)

hereto attached with the respective original as the same appears of record on file in the Office of Attorney General, Crime Laboratory Division, in the County of Burleigh, North Dakota, and find the same to be a true and correct copy thereof and of the whole thereof. In witness whereof I have set my hand at the city of Bismarck, in said county this

1 day of July, 2005

Margaret A. Pearson, State Toxicologist

State of North Dakota)
)ss
County of Burleigh)

On this 1 day of July, 2005, before me personally appeared Margaret A. Pearson, known to me to be a State Toxicologist for the State of North Dakota, acknowledged to me that she has executed the same.

Subscribed to and sworn before me this

1 day of July, 2005

Cindy Leingang, Notary Public, State of North Dakota
My Commission expires January 11, 2011 (SEAL)

CINDY LEINGANG
Notary Public
State of North Dakota
My Commission Expires Jan. 11, 2011

List of Approved Chemical Testing Devices (Page Two):

OFFICE OF ATTORNEY GENERAL
Crime Laboratory Division
Toxicology Section
2635 East Main Avenue
Bismarck, North Dakota 58501-5044

TEL (701) 328-6159
FAX (701) 328-6185

July 01, 2005

LIST OF APPROVED CHEMICAL TESTING DEVICES

Each of the following Intoxilyzers** has been inspected on the date indicated below by a field inspector appointed, trained, certified, and supervised by the State Toxicologist and has been found to be in good working order by such inspector; and is therefore approved by the State Toxicologist as a device for the analysis of breath to determine alcohol concentration, in accordance with Section 20.1-13.1-10, 20.1-15-11, 20.1-15-15, 39-20-07 and /or 39-20-14 of the North Dakota Century Code.

Serial Number	Instrument	Date Inspected	Location of Inspection+
68-010594	Intoxilyzer 5000 KB	06-Apr-05	Office of Attorney General, Crime Lab
68-010595	Intoxilyzer 5000 KB	17-May-05	Pierce Co SO-Rugby, ND
68-010597	Intoxilyzer 5000 KB	04-May-05	Ransom Co SO-Lisbon, ND
68-010619	Intoxilyzer 5000 KB	30-Jun-05	Office of Attorney General, Crime Lab
68-010623	Intoxilyzer 5000 KB	05-May-05	Bowman PD-Bowman, ND
68-010624	Intoxilyzer 5000 KB	23-May-05	McLean Co SO-Washburn, ND
68-010632	Intoxilyzer 5000 KB	11-May-05	Office of Attorney General, Crime Lab
68-010634	Intoxilyzer 5000 KB	11-May-05	Office of Attorney General, Crime Lab
68-010925	Intoxilyzer 5000 KB	23-May-05	Minot AFB-Minot, ND
68-011030	Intoxilyzer 5000 KB	11-Apr-05	Office of Attorney General, Crime Lab
68-011033	Intoxilyzer 5000 KB	03-May-05	Traill Co SO-Hillsboro, ND
68-011036	Intoxilyzer 5000 KB	23-May-05	Ward Co SO-Minot, ND
68-011180	Intoxilyzer 5000 KB	11-Apr-05	Office of Attorney General, Crime Lab
68-011181	Intoxilyzer 5000 KB	05-May-05	Adams Co SO-Hettinger, ND
68-011182	Intoxilyzer 5000 KB	18-May-05	Bottineau Co SO-Bottineau, ND
68-011183	Intoxilyzer 5000 KB	07-Apr-05	BIA-Fort Yates-Fort Yates, ND
68-011184	Intoxilyzer 5000 KB	23-May-05	Mercer Co SO-Stanton, ND
68-011185	Intoxilyzer 5000 KB	15-Apr-05	Office of Attorney General, Crime Lab
68-011186	Intoxilyzer 5000 KB	11-May-05	Office of Attorney General, Crime Lab
68-011214	Intoxilyzer 5000 KB	19-May-05	Grand Forks AFB-Grand Forks, ND
68-011775	Intoxilyzer 5000 KB-EP	16-May-05	BIA-New Town-New Town, ND
68-011776	Intoxilyzer 5000 KB-EP	16-May-05	Williston LEC, Williston, ND
68-011778	Intoxilyzer 5000 KB-EP	18-May-05	BIA-Belcourt-Belcourt, ND
68-011780	Intoxilyzer 5000 KB-EP	05-May-05	Dickinson PD-Dickinson, ND
68-011781	Intoxilyzer 5000 KB-EP	18-May-05	Rolette Co SO-Rolla, ND
68-011782	Intoxilyzer 5000 KB-EP	19-May-05	UND PD-Grand Forks, ND
68-012109	Intoxilyzer 5000 KB-EP	11-May-05	Office of Attorney General, Crime Lab
68-012110	Intoxilyzer 5000 KB-EP	02-May-05	Office of Attorney General, Crime Lab

Margaret A. Reams 1 July 2005

Page 1 of 3

List of Approved Chemical Testing Devices (Page Three):

+Indicates the location of the device at the time of inspection and does not restrict its use at other locations.

**Intoxilyzer is a Registered trademark of the breath alcohol testing devices originally manufactured by Federal Signal Corp., CMI, Inc., Minturn, CO, and at present by CMI, Inc., Owensboro, KY. The Intoxilyzer 5000 KB and Intoxilyzer 5000 KB-EP are both sold as an Intoxilyzer 5000 EN. The designation Intoxilyzer 5000 KB indicates an instrument with an internal printer, while the designation Intoxilyzer KB-EP indictes an instrument with an external printer.

The following gas chromatographs located in the Office of Attorney General, Crime Laboratory Division, are approved by the State Toxicologist as devices to conduct alcohol analysis, in accordance with Section 20.1-13.1-10, 20.1-15-11, 20.1-15-15, 39-20-07, and/or 39-20-14 of the North Dakota Century Code. As these instruments are inspected one or more times each day, separate inspection is not conducted on a yearly basis.

1. Model No. 3400CX, Serial No. 23340, Varian GC, made by Varian, Walnut Creek, California.

2. Model No. 3400, Serial No. 6085, Varian GC made by Varian, Walnut Creek, California.

This roster is current and shall be considered as such until a new roster is issued or until June 30, 2006, whichever is earlier.

Margaret A. Mason
July 2005

List of Certified Test Operators Letter of Certification (Page One):

State of North Dakota)
)ss
County of Burleigh)

I, Margaret A. Pearson, do hereby certify that I am a duly-appointed State Toxicologist for the State of North Dakota and an official custodian of the records and files of the office thereof, that I have carefully compared the

LIST OF CERTIFIED CHEMICAL TEST OPERATORS (JULY 1, 2005)

hereto attached with the respective original as the same appears of record on file in the Office of Attorney General, Crime Laboratory Division, in the County of Burleigh, North Dakota, and find the same to be a true and correct copy thereof and of the whole thereof. In witness whereof I have set my hand at the city of Bismarck, in said county this:

1 day of July, 2005

Margaret A. Pearson, State Toxicologist

State of North Dakota)
)ss
County of Burleigh)

On this 1 day of July, 2005, before me personally appeared Margaret A. Pearson, known to me to be a State Toxicologist for the State of North Dakota, acknowledged to me that she has executed the same.

Subscribed to and sworn before me this:

1 day of July, 2005

Cindy Leingang, Notary Public, State of North Dakota
My Commission Expires January 11, 2011

(SEAL)

CINDY LEINGANG
Notary Public
State of North Dakota
My Commission Expires Jan. 11, 2011

List of Certified Test Operators (Page Two):

OFFICE OF ATTORNEY GENERAL
Crime Laboratory Division
2635 East Main Avenue (58501)
P.O. Box 937
Bismarck, North Dakota 58502-0937

TEL 701-328-6159
TEL 800-296-2054
FAX 701-328-6185

07/01/05

LIST OF CERTIFIED CHEMICAL TEST OPERATORS

The following individuals have been trained and certified to conduct the analysis of breath to determine alcohol concentrations, pursuant to sections 20.1-13.1-10, 20.1-15-11, 20.1-15-15, 39-20-07, and/or 39-20-14 of the North Dakota Century Code:

Last Name	First Name	Agency Location	Class Code	Date of Initial Certification	Date of Certification Expiration
Aannerud	Todd J.	Fargo PD	4	04-25-96	06-30-06
Aberle	Darcy W.	ND Highway Patrol	4	01-12-01	06-30-06
Aberle	Shane A.	Fargo PD	4	10-16-03	06-30-06
Adolf	Michael G.	Stark Co SO	5	01-11-94	06-30-08
Ahlfeldt	William S.	Fargo PD	4	02-06-03	06-30-06
Ahlgren	Mark A.	Burleigh Co SO	5	01-07-98	06-30-06
Ahrens	Eric L.	Beulah PD	5	07-16-97	06-30-08
Allard	Thomas M.	Rolette Co SO	4	06-16-95	06-30-06
Allery	David L.	Rolette Co SO	4	06-01-84	06-30-06
Alzheimer	Anne E.	Fargo PD	4	04-04-86	06-30-06
Andersen	Travis R.	Ward Co SO	5	06-06-02	06-30-06
Anderson	Adam C.	Williston PD	5	07-14-97	06-30-06
Anderson	Brett M.	Bismarck PD	4	12-15-00	06-30-06
Anderson	Daniel D.	Barnes Co SO	4	02-21-96	06-30-06
Anderson	James M.	ND Highway Patrol	4	10-14-83	06-30-06
Anderson	Jason T.*	West Fargo PD	4	12-04-98	06-30-06
Anderson	Joshua S.	ND Highway Patrol	4	10-07-04	06-30-06
Anderson	Matthew W.	Wahpeton PD	4	02-05-04	06-30-06
Anderson	Paul M.	Traill Co SO	4	04-07-95	06-30-06
Anderson	Rick H.	Minot PD	5	06-06-02	06-30-06
Anderson	Susan J.	Bismarck PD	4	04-28-89	06-30-06
Appell	Tim J.	Wahpeton PD	4	04-05-95	06-30-06
Arend, Sr.	Todd R.	Grand Forks AFB	4	06-05-92	06-30-06
Arenz	Joseph J.	Bismarck PD	4	01-31-02	06-30-06
Argall	Micheal J.	Cass Co SO	4	10-03-80	06-30-06
Arman	Robert J.	ND Highway Patrol	4	04-15-97	06-30-06
Armendariz, Jr.	Pedro R.	ND Highway Patrol	4	04-07-95	06-30-06
Armitage	Rebecca J.	Pembina Co SO	5	02-05-02	06-30-08
Armstrong	Duane A.	ND Highway Patrol	4	11-20-87	06-30-06
Armstrong	Jeffrey D.	Grand Forks AFB	4	04-30-99	06-30-06
Arneson	Jerry L.	Richland Co SO	4	03-06-02	06-30-06
Arnhalt	Heidi J.	ND Parole & Probation	5	10-16-01	06-30-08
Aspinwall	Brent A.	Grand Forks AFB	4	10-14-04	06-30-06
Aufforth	Kurt A.	ND Game & Fish	5	03-24-92	06-30-06
Austin	Michael J.	Fargo PD	5	02-12-99	06-30-08
Austin	Scott A.	Morton Co SO	4	11-19-99	06-30-06
Axness	Joseph L.	Grand Forks PD	4	02-10-05	06-30-06
Axt	Faye L.	McClusky PD	5	11-05-02	06-30-06
Azure	Deanne C.	Gerald T. Fox Justice Ctr	5	03-05-98	06-30-08

Margaret A Pearson 1 July 2005

List of Certified Test Operators (Page Three):

Last Name	First Name	Agency Location	Class Code	Date of Initial Certification	Date of Certification Expiration
Wilmeth	Brent M.	Mandan PD	4	08-09-95	06-30-06
Wilmore	Kirk W.	Federal Protective Svcs	5	09-30-03	06-30-06
Wilson	Michael S.	Williston PD	5	06-30-00	06-30-08
Wimer	Kelly	Mandan PD	4	02-27-01	06-30-06
Wind, Sr.	Donovan J.	BIA-Fort Totten	5	02-01-05	06-30-08
Winkelman	Scott R.	ND Game & Fish	5	02-08-05	06-30-08
Winter	Duane S.	Gerald T. Fox Justice Ctr	5	02-01-05	06-30-08
Wise	Daniel R.	Richland Co SO	4	07-25-97	06-30-06
Witkowski	Richard A.	ND Game & Fish	5	03-24-92	06-30-06
Witte	Bret	Fargo PD	4	02-12-99	06-30-06
Wold	Peter F.	Cass Co Jail	5	02-12-99	06-30-08
Wolf	David M.	ND Highway Patrol	4	04-25-96	06-30-06
Wolf	Jeff	ND State Pen	5	09-18-97	06-30-06
Wolf	Kenneth L.	Cavalier PD	4	10-26-90	06-30-06
Wolff	James D.	Mercer Co SO	4	10-02-03	06-30-06
Woodall	Lynn G.	Morton Co SO	5	08-02-95	06-30-08
Worden	Lyndon	Cass Co SO	5	03-03-99	06-30-08
Wright	Chris A.	Rolla PD	4	10-14-04	06-30-06
Wright	Douglas J.	Grand Forks PD	4	06-14-95	06-30-06
Wutzke	Jerry L.	Lincoln PD	4	11-22-85	06-30-06
Yanke	Dal Raymond	ND Highway Patrol	4	04-27-79	06-30-06
Yeagley	Michael B.	Grand Forks AFB	4	10-31-02	06-30-06
Yellow Bird	Marlon	Fort Berthold Dist. Court	5	10-22-02	06-30-06
Yessilth	Judy	New Town Tribal Court	5	04-23-02	06-30-06
Yon	Robyn P.	Grand Forks PD	4	10-07-04	06-30-06
Young	Donny A.	Scranton PD	5	02-24-03	06-30-06
Young Bird	James D.	McLean Co SO	4	03-10-99	06-30-06
Ysteboe	Matthew B.	Fargo PD	4	10-16-03	06-30-06
Yttredahl	Steven B.	Pembina Co SO	4	01-29-04	06-30-06
Yunck	Casey J.	Dickey Co SO	4	12-02-04	06-30-06
Zachmeier	Andrew J.	Bismarck PD	4	06-16-95	06-30-06
Zalumskis	Jerry J.	James River Corr Ctr	5	04-23-02	06-30-06
Zaske	Del L.	Logan Co SO	5	01-29-02	06-30-06
Zayicek	Ryan N.	Grand Forks AFB	4	01-26-01	06-30-06
Zeeb	Kendall L.	West Fargo PD	4	06-05-92	06-30-06
Zeis	David J.	Cavalier Co SO	4	06-06-75	06-30-06
Zerr	Stacy D.	Tioga PD	5	03-10-04	06-30-06
Ziegler	Randy J.	Bismarck PD	5	11-04-94	06-30-08
Zietz	Marjorie L.	Minot PD	5	04-25-96	06-30-08
Ziliak	Ryan S.	Ward Co SO	4	04-25-96	06-30-06
Zimmel	Derik J.	Grand Forks PD	4	04-30-99	06-30-06
Zimmer	Jerry	Missouri River Corr Ctr	5	04-23-02	06-30-06

As of the above date, the following individuals have been trained and certified to conduct alcohol analysis by an approved gas chromatographic method, pursuant to Sections 20.1-13.1-10, 20.1-15-11, 20.1-15-15, 39-20-07, and/or 39-20-14 of the North Dakota Century Code. The date of certification expiration for these individuals shall be the last day of their employment in the Office of Attorney General, Crime Laboratory Division.

Name	Agency	Initial Employment Date
Burkett, Michelle	Office of Attorney General, Crime Laboratory Division	August 2003
Eder, Charles	Office of Attorney General, Crime Laboratory Division	September 1991
Pearson, Margaret*	Office of Attorney General, Crime Laboratory Division	October 1975
Reems, Brent*	Office of Attorney General, Crime Laboratory Division	December 1999

Margaret A Pearson 1 July 2005

List of Certified Test Operators (Page Four):

Last Name	First Name	Agency Location	Class Code	Date of Initial Certification	Date of Certification Expiration

Operator Class Codes as of July 1, 2004

Operator Class 4: Trained and Certified to Operate the Intoxilyzer S-D2, Intoxilyzer 5000 KB, and Intoxilyzer 5000 KB-EP

Operator Class 5: Trained and Certified to the Operate Intoxilyzer S-D2

*Certified as a Field Inspector

This roster is current and shall be considered as such until a new roster is issued or until June 30, 2006, whichever is earlier.

Margaret A Reason / July 2005

Page 24 of 24

NORTH DAKOTA CENTURY CODE

IMPLIED CONSENT AND CHEMICAL TEST LAWS

STATE OF NORTH DAKOTA

TITLE 5

ALCOHOLIC BEVERAGES

5-01-01. Definitions. In this title:

1. "Alcohol" means neutral spirits distilled at or above one hundred ninety degrees proof, whether or not such product is subsequently reduced, for nonindustrial use.
2. "Alcoholic beverages" means any liquid suitable for drinking by human beings, which contains one-half of one percent or more of alcohol by volume.
3. "Beer" means any malt beverage containing one-half of one percent or more of alcohol by volume.
4. "Distilled spirits" means any alcoholic beverage that is not beer, wine, sparkling wine, or alcohol.
5. "Licensed premises" means the premises on which beer, liquor, or alcoholic beverages are normally sold or dispensed and must be delineated by diagram or blueprint which must be included with the license application or the license renewal application.
6. "Liquor" means any alcoholic beverage except beer.
7. “Local governing body” means the governing entity of a city, county, or federally recognized Indian tribe in this state.
8. “Local license” means a city, county, or tribal retail alcoholic beverage license issued by the appropriate local governing body.
9. "Microbrew pub" means a brewer that brews ten thousand or fewer barrels of beer per year and sells beer produced or manufactured on the premises for consumption on or off the premises, or serves beer produced or manufactured on the premises for purposes of sampling the beer.
10. “Organization” means a domestic or foreign corporation, general partnership, limited partnership, or limited liability company.
11. “Sparkling wine" means wine made effervescent with carbon dioxide.
12. “Supplier” means an alcoholic beverage manufacturer, importer, marketer, or wholesaler selling alcoholic beverages to a wholesaler licensed in this state for purposes of resale.
13. “Tribal licensee” means a person issued a local license by the governing body of a federally recognized Indian tribe in this state for the retail sale of alcoholic beverages within the exterior tribal reservation boundaries.
14. “Twenty-one years of age” means it is after three a.m. on the date twenty-one years after a person’s date of birth.

15. “Wine" means the alcoholic beverage obtained by fermentation of agricultural products containing natural or added sugar or such beverage fortified with brandy and containing not more than twenty-four percent alcohol by volume.

5-01-05.1. Public intoxication - Assistance - Medical care.

A peace officer has authority to take any apparently intoxicated person to the person's home, to a local hospital, to a detoxification center, or, whenever that person constitutes a danger to that person or others, to a jail for purposes of detoxification. A duly licensed physician of a local hospital or a licensed addiction counselor of a detoxification center has authority to hold that person for treatment up to seventy-two hours. That intoxicated person may not be held in jail because of intoxication more than twenty-four hours. An intoxicated person may not be placed in a jail unless a jailer is constantly present within hearing distance and medical services are provided when the need is indicated. Upon placing that person in a hospital, detoxification center, or jail, the peace officer shall make a reasonable effort to notify the intoxicated person's family as soon as possible. Any additional costs incurred by the city or county on account of an intoxicated person shall be recoverable from that person.

5-01-08. Persons under twenty-one years of age prohibited from manufacturing, purchasing, consuming, or possessing alcoholic beverages or entering licensed premises - Penalty - Exceptions - Referrals to addiction facilities - Jurisdiction.

Except as permitted in this section and section 5-02-06, a person under twenty-one years of age may not manufacture or attempt to manufacture, purchase or attempt to purchase, consume or have recently consumed other than during a religious service, be under the influence of, be in possession of, or furnish money to any person for the purchase of an alcoholic beverage, or enter any licensed premises where alcoholic beverages are being sold or displayed, except a restaurant when accompanied by a parent or legal guardian, or in accordance with section 5-02-06, or if the person is a law enforcement officer or other public official who enters the premises in the performance of official duty, or if the person enters the premises for training, education, or research purposes under the supervision of a person twenty-one or more years of age with prior notification of the local licensing authority. A violation of this section is a class B misdemeanor. The court may, under this section, refer the person to an outpatient addiction facility licensed by the state department of human services for evaluation and appropriate counseling or treatment. The offense of consumption occurs in the county of consumption or the county where the offender is arrested.

5-01-09. Delivery to certain persons unlawful.

Any person knowingly delivering alcoholic beverages to a person under twenty-one years of age, except as allowed under section 5-02-06, or to a habitual drunkard, an incompetent, or an obviously intoxicated person is guilty of a class A misdemeanor, subject to sections 5-01-08, 5-01-08.1, and 5-01-08.2.

5-02-06. Prohibitions as to persons under twenty-one years of age - Penalty - Exceptions.

Except as permitted in this section, any licensee who dispenses alcoholic beverages to a person under twenty-one years of age, or who permits such a person to remain on the licensed premises while alcoholic beverages are being sold or displayed, is guilty of a class A misdemeanor, subject to sections 5-01-08, 5-01-08.1, and 5-01-08.2. Any person under twenty-one years of age may remain in a restaurant where alcoholic beverages are being sold if the restaurant is separated from the room in which alcoholic beverages are opened or mixed and gross sales of food are at least equal to gross sales of alcoholic beverages which are consumed in the dining area, or if the person is employed by the restaurant as a food waiter, food waitress, busboy, or busgirl under the direct supervision of a person twenty-one or more years of age and is not engaged in the sale, dispensing, delivery, or consumption of alcoholic beverages. A person may enter and remain on the licensed premises if the person is a law enforcement officer or other public official who enters the premises in the performance of official duty or if the person enters the licensed premises for training, education, or research purposes under the supervision of a person twenty-one or more years of age with prior notification of the local licensing authority. Any person under twenty-one years of age may remain in an area of a site where beer, wine, or sparkling wine is sold in accordance with the conditions of an event permit issued pursuant to section 5-02-01.1. Any person who is nineteen years of age or older but under twenty-one years of age may be employed by the restaurant to serve and collect money for alcoholic beverages, if the person is under the direct supervision of a person twenty-one or more years of age, but may not be engaged in mixing, dispensing, or consuming alcoholic beverages. Any establishment where alcoholic beverages are sold may employ persons from eighteen to twenty-one years of age to work in the capacity of musicians under the direct supervision of a person twenty-one or more years of age.

CHAPTER 20.1-02

GAME AND FISH DEPARTMENT

20.1-02-15.1. Additional powers of director, deputy director, chief game wardens, or district game wardens.

The director, deputy director, chief game wardens, or district game wardens have the power of a peace officer in the following circumstances:

1. To enforce state laws and rules on any game refuge, game management area or other land or water owned, leased, or managed by the department.
2. When responding to requests from other law enforcement agencies or officers for aid and assistance. For the purposes of this subsection, a request from a law enforcement agency or officer means only a request for assistance as to a particular and singular

violation or suspicion of violation of law, and does not constitute a continuous request for assistance outside the purview of enforcement of the provisions of this title.
3. The powers and duties conferred are supplemental to other powers and duties conferred upon the director, deputy director, chief game wardens, or district game wardens and do not constitute an obligation beyond the regular course of duty of those officers.
4. To enforce chapter 20.1-15.
5. To enforce chapter 20.1-13.1.
6. To enforce chapter 39-24.1.
This section may not be construed to limit the powers or duties of any peace officer within this state.

CHAPTER 20.1-13.1

INTOXICATION TESTING OF BOAT OPERATORS

20.1-13.1-01. Implied consent to determine alcoholic and drug content of blood.

Any person who operates a motorboat or vessel in this state is deemed to have given consent, and shall consent, subject to this chapter, to a chemical test, or tests, of the blood, breath, saliva, or urine for the purpose of determining the alcoholic, other drug, or combination thereof, content of the blood. As used in this chapter, "operates" means to be in motion, en route, but not at anchor or aground; "vessel" means any watercraft used or designed to be used for navigation on the water such as a boat operated by machinery, either permanently or temporarily affixed, a sailboat other than a sailboard, an inflatable manually propelled boat, a canoe, kayak, or rowboat, but does not include an inner tube, air mattress, or other water toy; "drug" means any drug or substance or combination of drugs or substances which renders a person incapable of safely operating a motorboat or vessel; and "chemical test" means any test or tests to determine the alcoholic, or other drug, or combination thereof, content of the blood, breath, saliva, or urine, approved by the state toxicologist under this chapter. The chemical test must be administered at the direction of a game warden or a law enforcement officer only after placing the person, except persons mentioned in section 20.1-13.1-04, under arrest and informing that person that the person is or will be charged with the offense of operating a motorboat or vessel while under the influence of intoxicating liquor, drugs, or a combination thereof. For the purposes of this chapter, the taking into custody of a minor under section 27-20-13 satisfies the requirement of an arrest. The game warden or law enforcement officer shall also inform the person charged that refusal of the person to submit to the chemical test determined appropriate will result in that person being prohibited from operating a motorboat or vessel for up to three years. The game warden or law enforcement officer shall determine the chemical test to be used. When a minor is taken into custody for violating section 20.1-13-07, the game warden or law enforcement officer shall diligently attempt to contact the minor's parent or legal guardian to explain the cause for the custody and the implied consent chemical testing requirements. Neither the game warden or law enforcement officer's

efforts to contact, nor any consultation with, a parent or legal guardian may be permitted to interfere with the administration of chemical testing requirements under this chapter.

20.1-13.1-02. Chemical test of operator in serious bodily injury or fatal accident.

Notwithstanding section 20.1-13.1-01 or 20.1-13.1-06, when the operator of a motorboat or vessel is involved in an accident resulting in the death or serious bodily injury, as defined in section 12.1-01-04, of another person, and there is probable cause to believe that the operator is in violation of section 20.1-13-07, the operator may be compelled by a game warden or a police officer to submit to a chemical test.

20.1-13.1-03. Persons qualified to administer chemical test and opportunity for additional test.

Only an individual medically qualified to draw blood, acting at the request of a game warden or a law enforcement officer, may withdraw blood for the purpose of determining the alcoholic, drug, or combination thereof, content of the blood. The state toxicologist shall determine the qualifications or credentials for being medically qualified to draw blood and shall issue a list of approved designations, including medical doctor and registered nurse. This limitation does not apply to the taking of a breath, saliva, or urine specimen. The person tested may have an individual of that person's own choosing, who is medically qualified to draw blood, administer a chemical test in addition to any administered at the direction of a game warden or a law enforcement officer with all costs of the additional chemical test to be the responsibility of the person charged. The failure or inability to obtain an additional chemical test by a person does not preclude the admission of the chemical test taken at the direction of a game warden or a law enforcement officer. Upon the request of the person who is tested, a copy of the operational checklist and test record of a breath sample test or analytical report of a blood, urine, or saliva sample test taken at the direction of the game warden or law enforcement officer must be made available to that person by the department or law enforcement agency that administered the chemical test.

20.1-13.1-04. Consent of person incapable of refusal not withdrawn.

Any person who is dead, unconscious, or otherwise in a condition rendering that person incapable of refusal is deemed not to have withdrawn the consent provided by section 20.1-13.1-01 and the chemical test may be given.

20.1-13.1-05. Action following chemical test result for a motorboat or vessel operator.

If a person submits to a chemical test under section 20.1-13.1-01, 20.1-13.1-03, or 20.1-13.1-04 and the test shows that person to have an alcohol, other drug, or a combination thereof concentration of at least ten one-hundredths of one percent by weight at the time of the performance of the test within two hours after the operating of a motorboat or vessel, the following procedures apply:

1. The game warden or law enforcement officer shall immediately issue a statement of intent to prohibit the person from operating a motorboat or vessel. The issuance of a statement of intent to prohibit the person from operating a motorboat or vessel serves as the director's official notification to the person of the director's intent to prohibit the person from operating a motorboat or vessel in this state.
2. If a chemical test administered under section 20.1-13.1-01 or 20.1-13.1-04 was by saliva or urine sample or by drawing blood as provided in section 20.1-13.1-03 and the person tested does not reside in an area in which the game warden or law enforcement officer has jurisdiction, the game warden or law enforcement officer shall, on receiving the analysis of the saliva, urine, or blood from the state toxicologist and if the analysis shows that person had an alcohol, other drug, or a combination thereof concentration of at least ten one-hundredths of one percent by weight, either proceed in accordance with subsection 1 during that person's reappearance within the game warden's or officer's jurisdiction or notify a game warden or law enforcement agency having jurisdiction where the person resides. On that notification, that game warden or law enforcement agency shall immediately issue a statement of intent to prohibit the person from operating a motorboat or vessel. The issuance of a statement of intent to prohibit the person from operating a motorboat or vessel serves as the director's official notification to the person of the director's intent to prohibit the person from operating a motorboat or vessel in this state.
3. The game warden or law enforcement officer, within five days of issuing the statement of intent, shall forward to the director a certified written report in the form required by the director. If the statement was given because of the results of a chemical test, the report must show that the game warden or officer had probable cause to believe the person had been operating a motorboat or vessel while in violation of section 20.1-13-07, that the person was lawfully arrested, that the person was chemically tested under this chapter, and that the results of the test show that the person had an alcohol, other drug, or a combination thereof concentration of at least ten one-hundredths of one percent by weight. In addition to the report, the game warden or law enforcement officer shall forward to the director a certified copy of the operational checklist and test records of a breath test and a copy of the certified copy of the analytical report for a blood, saliva, or urine test for all tests administered at the direction of the game warden or officer.

20.1-13.1-06. Revocation of privilege to operate motorboat or vessel upon refusal to submit to testing.

1. If a person refuses to submit to testing under section 20.1-13.1-01, no chemical test may be given, but the game warden or law enforcement officer shall immediately issue to that person a statement of intent to prohibit the person from operating a motorboat or vessel. The statement serves as the director's official notification to the person of the director's intent to prohibit the person from operating a motorboat or vessel in this state and of the hearing procedures under this chapter. The director, upon the receipt of the certified written report of the game warden or law enforcement officer in the form required by the director, forwarded by the warden or officer within five days after issuing

the statement of intent, showing that the warden or officer had probable cause to believe the person had been operating a motorboat or vessel while in violation of section 20.1-13-07 or had observed that the motorboat or vessel was operated in a negligent, reckless, or hazardous manner as defined by the director by rule, that the person was lawfully arrested if applicable, and that the person had refused to submit to the chemical test under section 20.1-13.1-01, shall prohibit the person from operating a motorboat or vessel in this state for the appropriate period under this section. The period for which a person is prohibited from operating a motorboat or vessel under this section is:

a. One year if the person's record shows that within the five years preceding the most recent refusal under this section, the person has not been prohibited from operating a motorboat or vessel for a violation of this chapter or for a violation of section 20.1-13-07.

b. Two years if the person's record shows that within the five years preceding the most recent refusal under this section, the person has once been prohibited from operating a motorboat or vessel for a violation of this chapter or for a violation of section 20.1-13-07.

c. Three years if the person's record shows that within the five years preceding the most recent refusal under this section, the person has twice been prohibited from operating a motorboat or vessel under this chapter or for a violation of section 20.1-13-07, and the prohibitions resulted from at least two separate arrests.

2. A person may not be prohibited from operating a motorboat or vessel under this section if:

a. No administrative hearing request is made under section 20.1-13.1-08;

b. The person mails an affidavit to the director within ten days after the game warden or law enforcement officer issues the statement of intent. The affidavit must state that the person:

(1) Intends to voluntarily plead guilty to violating section 20.1-13-07 within twenty-five days after the game warden or law enforcement officer issues the statement of intent;

(2) Agrees that the person may not operate a motorboat or vessel for the appropriate period;

(3) Acknowledges the right to a section 20.1-13.1-08 administrative hearing and section 20.1-13.1-09 judicial review and voluntarily and knowingly waives these rights; and

(4) Agrees that the person may not operate a motorboat or vessel for the appropriate period as provided under this section without an administrative hearing or judicial review, if the person does not plead guilty within twenty-five days after the game warden or law enforcement officer issues the statement of intent, or the court does not accept the guilty plea, or the guilty plea is withdrawn;

c. The person pleads guilty to violating section 20.1-13-07 within twenty-five days after the game warden or law enforcement officer issues the statement of intent;

d. The court accepts the person's guilty plea and a notice of that fact is mailed to the director within twenty-five days after the game warden or law enforcement officer issues the statement of intent; and

e. A copy of the final order or judgment of conviction evidencing the acceptance of the person's guilty plea is received by the director prior to the end of the prohibition from operating a motorboat or vessel.

3. The court shall mail a copy of an order granting a withdrawal of a guilty plea to violating section 20.1-13-07 to the director within ten days after it is ordered. Upon

receipt of the order, the director immediately shall prohibit the person from operating a motorboat or vessel as provided under this section without providing an administrative hearing.

20.1-13.1-07. Administrative sanction for operating motorboat or vessel while having certain drug concentrations.

After the receipt of the certified report of a game warden or a law enforcement officer and if no written request for hearing has been received from the arrested person under section 20.1-13.1-08, or if that hearing is requested and the findings, conclusion, and decision from the hearing confirm that the game warden or law enforcement officer had probable cause to arrest the person and chemical test results show that the arrested person was operating a motorboat or vessel while having an alcohol, other drug, or a combination thereof concentration of at least ten one-hundredths of one percent by weight at the time of the performance of a test within two hours after operating a motorboat or vessel, the director shall prohibit the person from operating any motorboat or vessel in this state as follows:

1. For ninety-one days if the person's record shows that, within the five years preceding the date of the arrest, the person has not previously violated section 20.1-13-07 or the person has not been prohibited from operating a motorboat or vessel under this chapter.
2. For three hundred sixty-four days if the person's record shows that, within the five years preceding the date of the arrest, the person has once previously violated section 20.1-13-07 or the person has once been prohibited from operating a motorboat or vessel under this chapter.
3. For two years if the person's record shows that within the five years preceding the date of the arrest, the person has twice been prohibited from operating a motorboat or vessel under this chapter, or for a violation of section 20.1-13-07, or any combination thereof, and the prohibitions resulted from at least two separate arrests.

20.1-13.1-08. Administrative hearing on request.

1. Before prohibiting a person from operating a motorboat or vessel under section 20.1-13.1-06 or 20.1-13.1-07, the director shall afford that person an opportunity for a hearing if the person mails a request for the hearing to the director within ten days after the date the game warden or law enforcement officer issued a statement of intent to prohibit the person from operating a motorboat or vessel. The hearing must be held within twenty-five days after the date of issuance of the statement of intent, but the hearing officer may extend the hearing to within thirty-five days after the issuance of the statement of intent if good cause is shown.
2. If the issue to be determined by the hearing concerns the prohibition from operating a motorboat or vessel for operating a motorboat or vessel while having an alcohol, other drug, or a combination thereof concentration of at least ten one-hundredths of one percent by weight, the hearing must be before a hearing officer assigned by the director and at a time and place designated by the director. The hearing must be recorded and its scope may cover only the issues of whether the arresting warden or officer had

probable cause to believe the person had been operating a motorboat or vessel in violation of section 20.1-13-07; whether the person was placed under arrest; whether the person was tested in accordance with section 20.1-13.1-01 or 20.1-13.1-04 and, if applicable, section 20.1-13.1-03; and whether the chemical test results show the person had an alcohol, other drug, or a combination thereof concentration of at least ten one-hundredths of one percent by weight. For purposes of this section, a copy of a certified copy of an analytical report of a blood, urine, or saliva sample from the state toxicologist, or a certified copy of the checklist and test records from a certified breath test operator establish prima facie the alcohol, other drug, or a combination thereof concentration shown therein. Whether the person was informed that that person may be prohibited from operating a motorboat or vessel based on the results of the chemical test is not an issue.

3. If the issue to be determined by the hearing concerns the prohibition from operating a motorboat or vessel for refusing to submit to a chemical test under section 20.1-13.1-01, the hearing must be before a hearing officer assigned by the director at a time and place designated by the director. The hearing must be recorded. The scope of a hearing for refusing to submit to a chemical test under section 20.1-13.1-01 may cover only the issues of whether a game warden or law enforcement officer had probable cause to believe the person had been operating a motorboat or vessel in violation of section 20.1-13-07; whether the person was placed under arrest; and whether that person refused to submit to the chemical test.

4. At a hearing under this section, the regularly kept records of the director may be introduced. Those records establish prima facie their contents without further foundation. For purposes of this chapter, the following are deemed regularly kept records of the director: any copy of a certified copy of an analytical report of a blood, urine, or saliva sample received by the director from the state toxicologist or a game warden or a law enforcement officer, a certified copy of the checklist and test records received by the director from a certified breath test operator, and any copy of a certified copy of a certificate of the state toxicologist relating to approved methods, devices, operators, materials, and checklists used for testing for alcohol, other drug, or a combination thereof concentration received by the director from the state toxicologist, or the recorder, unless the board of county commissioners has designated a different official to maintain the certificate.

5. At the close of the hearing, the hearing officer shall notify the person of the hearing officer's findings of fact, conclusions of law, and decision based on the findings and conclusions and shall immediately deliver to the person a copy of the decision. If the hearing officer does not find in favor of the person, the copy of the decision serves as the director's official notification to the person that the person is prohibited from operating a motorboat or vessel in this state. The hearing officer shall report the findings, conclusions, and decisions to the director within ten days of the conclusion of the hearing.

6. If the person who requested a hearing under this section fails to appear at the hearing without justification, the right to the hearing is waived, and the hearing officer's determination on prohibition of the person from operating a motorboat or vessel will be based on the written request for hearing, game warden's or law enforcement officer's report, and other evidence as may be available. The hearing officer shall, on the date

for which the hearing is scheduled, mail to the person, by regular mail, at the address on file with the director, or at any other address for the person or the person's legal representative supplied in the request for hearing, a copy of the decision which serves as the director's official notification to the person that the person is prohibited from operating a motorboat or vessel in this state for the appropriate period. Even if the person for whom the hearing is scheduled fails to appear at the hearing, the hearing is deemed to have been held on the date for which it is scheduled for purposes of appeal under section 20.1-13.1-09.

20.1-13.1-09. Judicial review.

Any person who has been prohibited from operating a motorboat or vessel by the decision of the hearing officer under section 20.1-13.1-08 may appeal within seven days after the date of the hearing under section 20.1-13.1-08 as shown by the date of the hearing officer's decision, notwithstanding section 28-32-42, by serving on the director and filing a notice of appeal and specifications of error in the district court in the county where the events occurred for which the demand for a chemical test was made or in the county in which the administrative hearing was held. The court shall set the matter for hearing, and the petitioner shall give twenty days' notice of the hearing to the director and to the hearing officer who rendered the decision. Neither the director nor the court may stay the decision pending decision on appeal. Within fifteen days after receipt of the notice of appeal, the director or the hearing officer who rendered the decision shall file in the office of the clerk of court to which the appeal is taken a certified transcript of the testimony and all other proceedings. This record is the record on which the appeal must be determined. No additional evidence may be heard. The court shall affirm the decision of the director or hearing officer unless it finds the evidence insufficient to warrant the conclusion reached by the director or hearing officer. The court may direct that the matter be returned to the director or hearing officer for rehearing and the presentation of additional evidence.

20.1-13.1-10. Interpretation of chemical tests.

Upon the trial of any action or proceeding arising out of acts alleged to have been committed by any person while operating a motorboat or vessel while under the influence of intoxicating liquor, drugs, or a combination thereof, evidence of the amount of alcohol, drugs, or a combination thereof in the person's blood at the time of the act alleged as shown by a chemical analysis of the blood, breath, saliva, or urine is admissible. For the purpose of this section:

1. A person having an alcohol, other drug, or a combination thereof concentration of at least ten one-hundredths of one percent by weight at the time of the performance of a chemical test within two hours after operating a motorboat or vessel is under the influence of intoxicating liquor, drugs, or a combination thereof at the time of operating a motorboat or vessel.

2. Alcohol concentration is based upon grams of alcohol per one hundred cubic centimeters of blood or grams of alcohol per two hundred ten liters of alveolar air or grams of alcohol per sixty-seven cubic centimeters of urine.
3. The results of the chemical test must be received in evidence when it is shown that the sample was properly obtained and the test was fairly administered, and if the test is shown to have been performed according to methods and with devices approved by the state toxicologist, and by an individual possessing a certificate of qualification to administer the test issued by the state toxicologist. The state toxicologist is authorized to approve satisfactory devices and methods of chemical tests and determine the qualifications of individuals to conduct such tests, and shall issue a certificate to every qualified operator. An operator shall exhibit the certificate upon demand of the person requested to take the chemical test.
4. The state toxicologist may appoint, train, certify, and supervise field inspectors of breath testing equipment and its operation, and the inspectors shall report the findings of any inspection to the state toxicologist for appropriate action. Upon approval of the methods or devices, or both, required to perform the tests and the persons qualified to administer them, the state toxicologist shall prepare and file written record of the approval with the director and the recorder in each county, unless the board of county commissioners designates a different official, and shall include in the record:
a. An annual register of the specific testing devices currently approved, including serial number, location, and the date and results of last inspection.
b. An annual register of currently qualified and certified operators of the devices, stating the date of certification and its expiration.
c. The operational checklist and forms prescribing the methods currently approved by the state toxicologist in using the devices during the administration of the tests.
The material filed under this section may be supplemented when the state toxicologist determines it to be necessary, and any supplemental material has the same force and effect as the material that it supplements.
5. Copies of the records referred to in subsections 3 and 4, certified by the recorder, or designated official, must be admitted as prima facie evidence of the matters stated in the records.
6. A certified copy of the analytical report of a blood, urine, or saliva test issued by the state toxicologist must be accepted as prima facie evidence of the results of a chemical test performed under this chapter.
7. Notwithstanding any statute or rule to the contrary, the defendant in any criminal proceeding may subpoena, without cost to the defendant, the person who conducted the chemical test referred to in this section to testify at the trial on the issue of the amount of alcohol, drugs, or a combination thereof in the defendant's blood, breath, saliva, or urine at the time of the alleged act.
8. A signed statement from the nurse or medical technician drawing the blood sample for testing as set forth in subsection 3 is prima facie evidence that the blood sample was properly drawn and no further foundation for the admission of such evidence may be required.

CHAPTER 20.1-15

INTOXICATION TESTING OF HUNTERS

20.1-15-01. Implied consent to determine alcoholic and drug content of blood.

Any person who is afield with a gun or other firearm or a bow and arrow is deemed to have given consent, and shall consent, subject to this chapter, to a chemical test of the blood, breath, saliva, or urine for the purpose of determining the alcoholic, other drug, or combination thereof, content of the blood. As used in this chapter, "drug" means any drug or substance or combination of drugs or substances which renders a person incapable of safely hunting or being afield with a gun or other firearm or a bow and arrow, and "chemical test" means any test or tests to determine the alcoholic, or other drug, or combination thereof, content of the blood, breath, saliva, or urine, approved by the state toxicologist under this chapter. The chemical test must be administered at the direction of a game warden or a law enforcement officer only after placing the person, except persons mentioned in section 20.1-15-04, under arrest and informing that person that the person is or will be charged with the offense of being afield with a gun or other firearm or a bow and arrow while under the influence of intoxicating liquor, drugs, or a combination thereof. For the purposes of this chapter, the taking into custody of a minor under section 27-20-13 satisfies the requirement of an arrest. The game warden or law enforcement officer shall also inform the person charged that refusal of the person to submit to the chemical test determined appropriate will result in a revocation for up to four years of the person's hunting privileges. The game warden or law enforcement officer shall determine the chemical test to be used. When a minor is taken into custody for violating section 20.1-01-06, the game warden or law enforcement officer shall diligently attempt to contact the minor's parent or legal guardian to explain the cause for the custody and the implied consent chemical testing requirements. Neither the game warden or law enforcement officer's efforts to contact, nor any consultation with, a parent or legal guardian may be permitted to interfere with the administration of chemical testing requirements under this chapter.

20.1-15-02. Chemical test of hunter in serious bodily injury or fatal accident.

Notwithstanding section 20.1-15-01 or 20.1-15-06, when a hunter is involved in an accident resulting in the death or serious bodily injury, as defined in section 12.1-01-04, of another person, and there is probable cause to believe that the hunter is in violation of section 20.1-01-06, the hunter may be compelled by a game warden or a police officer to submit to a chemical test.

20.1-15-03. Persons qualified to administer chemical test and opportunity for additional test.

Only an individual medically qualified to draw blood, acting at the request of a game warden or a law enforcement officer, may withdraw blood for the purpose of determining the alcoholic, drug, or combination thereof, content of the blood. The state toxicologist

shall determine the qualifications or credentials for being medically qualified to draw blood and shall issue a list of approved designations, including medical doctor and registered nurse. This limitation does not apply to the taking of a breath, saliva, or urine specimen. The person tested may have an individual of that person's own choosing, who is medically qualified to draw blood, administer a chemical test in addition to any administered at the direction of a game warden or a law enforcement officer with all costs of the additional chemical test to be the responsibility of the person charged. The failure or inability to obtain an additional chemical test by a person does not preclude the admission of the chemical test taken at the direction of a game warden or a law enforcement officer. Upon the request of the person who is tested, a copy of the operational checklist and test record of a breath sample test or analytical report of a blood, urine, or saliva sample test taken at the direction of the game warden or law enforcement officer must be made available to that person by the department or law enforcement agency that administered the chemical test.

20.1-15-04. Consent of person incapable of refusal not withdrawn.

Any person who is dead, unconscious, or otherwise in a condition rendering that person incapable of refusal is deemed not to have withdrawn the consent provided by section 20.1-15-01 and the chemical test may be given.

20.1-15-05. Action following chemical test result for a hunter.

If a person submits to a chemical test under section 20.1-15-01, 20.1-15-03, or 20.1-15-04 and the test shows that person to have an alcohol, other drug, or a combination thereof concentration of at least ten one-hundredths of one percent by weight at the time of the performance of the test within two hours after being afield with a gun or other firearm or a bow and arrow, the following procedures apply:

1. The game warden or law enforcement officer shall immediately issue a statement of intent to revoke, suspend, or deny hunting privileges and take possession of the person's hunting license if it is then available. The issuance of a statement of intent to revoke, suspend, or deny hunting privileges and the taking of possession of the person's hunting license serves as the director's official notification to the person of the director's intent to revoke, suspend, or deny hunting privileges in this state.
2. If a chemical test administered under section 20.1-15-01 or 20.1-15-04 was by saliva or urine sample or by drawing blood as provided in section 20.1-15-03 and the person tested does not reside in an area in which the game warden or law enforcement officer has jurisdiction, the game warden or law enforcement officer shall, on receiving the analysis of the saliva, urine, or blood from the state toxicologist and if the analysis shows that person had an alcohol, other drug, or a combination thereof concentration of at least ten one-hundredths of one percent by weight, either proceed in accordance with subsection 1 during that person's reappearance within the game warden's or officer's jurisdiction or notify a game warden or law enforcement agency having jurisdiction where the person resides. On that notification, that game warden or law enforcement agency shall immediately issue a statement of intent to revoke, suspend, or deny

hunting privileges and take possession of the person's hunting license if it is then available and, within twenty-four hours, forward the license to the game warden or law enforcement agency making the arrest or to the director. The issuance of a statement of intent to revoke, suspend, or deny hunting privileges and the taking of possession of the person's hunting license serves as the director's official notification to the person of the director's intent to revoke, suspend, or deny hunting privileges in this state.
3. The game warden or law enforcement officer, within five days of issuing the statement of intent and taking possession of the hunting license, shall forward to the director a certified written report in the form required by the director and the person's hunting license taken under subsection 1 or 2. If the notice was given and the license was taken because of the results of a chemical test, the report must show that the game warden or officer had reasonable grounds to believe the person had been afield with a gun or other firearm or a bow and arrow while in violation of section 20.1-01-06, that the person was lawfully arrested, that the person was chemically tested under this chapter, and that the results of the test show that the person had an alcohol, other drug, or a combination thereof concentration of at least ten one-hundredths of one percent by weight. In addition to the report, the game warden or law enforcement officer shall forward to the director a certified copy of the operational checklist and test records of a breath test and a copy of the certified copy of the analytical report for a blood, saliva, or urine test for all tests administered at the direction of the game warden or officer.

20.1-15-06. Revocation of privilege to hunt upon refusal to submit to testing.

1. If a person refuses to submit to testing under this chapter, no chemical test may be given, but the game warden or law enforcement officer shall immediately issue a statement of intent to revoke, suspend, or deny hunting privileges and take possession of the person's hunting license if it is then available. The issuance of a statement of intent to revoke, suspend, or deny hunting privileges and the taking of possession of the person's hunting license serves as the director's official notification to the person of the director's intent to revoke hunting privileges in this state and of the hearing procedures under this chapter. The director, upon the receipt of that person's hunting license and a certified written report of the game warden or law enforcement officer in the form required by the director, forwarded by the warden or officer within five days after issuing the statement of intent and taking possession of the person's hunting license, showing that the warden or officer had reasonable grounds to believe the person had been afield with a gun or other firearm or a bow and arrow while in violation of section 20.1-01-06 or, for purposes of section 20.1-15-15, had reason to believe and had, through personal observations, formulated an opinion that the person's body contains alcohol, other drugs, or a combination thereof, that the person was lawfully arrested if applicable, and that the person had refused to submit to the chemical test under this chapter, shall revoke that person's hunting privileges for the appropriate period under this section, or if the person is without hunting privileges in this state, the director shall deny to the person hunting privileges for the appropriate period under this section after the date of the alleged violation, subject to the opportunity for a prerevocation hearing and postrevocation review as provided in this chapter. In the revocation of the person's hunting privileges the director shall give credit for time in which the person was without

hunting privileges after the day of the person's refusal to submit to the chemical test. The period of revocation or denial of hunting privileges under this section is:
a. Two years if the person's record shows that within the five years preceding the most recent refusal under this section, the person's hunting privileges have not previously been suspended, revoked, or issuance of a license denied for a violation of this chapter or section 20.1-01-06.
b. Three years if the person's record shows that within the five years preceding the most recent refusal under this section, the person's hunting privileges have been once previously suspended, revoked, or issuance of a license denied for a violation of this chapter or section 20.1-01-06.
c. Four years if the person's record shows that within the five years preceding the most recent refusal under this section, the person's hunting privileges have at least twice previously been suspended, revoked, or issuance of a license denied under this chapter or for a violation of section 20.1-01-06 and the suspensions, revocations, or denials resulted from at least two separate arrests.
2. A person's hunting privileges are not subject to revocation under this section if:
a. No administrative hearing request is made under section 20.1-15-08;
b. The person mails an affidavit to the director within ten days after the game warden or law enforcement officer issues the statement of intent and takes possession of that person's hunting license. The affidavit must state that the person:
(1) Intends to voluntarily plead guilty to violating section 20.1-01-06 within twenty-five days after the game warden or law enforcement officer issues the statement of intent and takes possession of the person's hunting license;
(2) Agrees that the person's hunting privileges must be suspended;
(3) Acknowledges the right to a section 20.1-15-08 administrative hearing and section 20.1-15-09 judicial review and voluntarily and knowingly waives these rights; and
(4) Agrees that the person's hunting privileges must be revoked as provided under this section without an administrative hearing or judicial review, if the person does not plead guilty within twenty-five days after the game warden or law enforcement officer issues the statement of intent and takes possession of the person's hunting license, or the court does not accept the guilty plea, or the guilty plea is withdrawn;
c. The person pleads guilty to violating section 20.1-01-06 within twenty-five days after the game warden or law enforcement officer issues the statement of intent and takes possession of the person's hunting license;
d. The court accepts the person's guilty plea and a notice of that fact is mailed to the director within twenty-five days after the game warden or law enforcement officer issues the statement of intent and takes possession of the person's hunting license; and
e. A copy of the final order or judgment of conviction evidencing the acceptance of the person's guilty plea is received by the director prior to the return or reinstatement of the person's hunting privileges.
3. The court shall mail a copy of an order granting a withdrawal of a guilty plea to violating section 20.1-01-06 to the director within ten days after it is ordered. Upon receipt of the order, the director immediately shall revoke the person's hunting privileges as provided under this section without providing an administrative hearing.

20.1-15-07. Administrative sanction for being afield with a gun or other firearm or a bow and arrow while having certain drug concentrations.

1. After the receipt of a person's hunting license, if taken under section 20.1-15-05, and the certified report of a game warden or a law enforcement officer and if no written request for hearing has been received from the arrested person under section 20.1-15-08, or if that hearing is requested and the findings, conclusion, and decision from the hearing confirm that the game warden or law enforcement officer had reasonable grounds to arrest the person and chemical test results show that the arrested person had been afield with a gun or other firearm or a bow and arrow while having an alcohol, other drug, or a combination thereof concentration of at least ten one-hundredths of one percent by weight at the time of the performance of a test within two hours after being afield with a gun or other firearm or a bow and arrow, the director shall suspend the person's hunting privileges as follows:
a. For one year if the person's record shows that, within the five years preceding the date of the arrest, the person has not previously violated section 20.1-01-06 or the person's hunting privileges have not previously been suspended or revoked under this chapter.
b. For two years if the person's record shows that, within the five years preceding the date of the arrest, the person has once previously violated section 20.1-01-06 or the person's hunting privileges have once previously been suspended or revoked under this chapter.
c. For three years if the person's record shows that within the five years preceding the date of the arrest, the person's hunting privileges have at least twice previously been suspended, revoked, or issuance denied under this chapter, or for a violation of section 20.1-01-06, or any combination thereof, and the suspensions, revocations, or denials resulted from at least two separate arrests.
2. In the suspension of the person's hunting privileges the director shall give credit for the time the person was without a hunting license after the day of the offense.

20.1-15-08. Administrative hearing on request.

1. Before issuing an order of suspension, revocation, or denial under section 20.1-15-06 or 20.1-15-07, the director shall afford that person an opportunity for a hearing if the person mails a request for the hearing to the director within ten days after the date the game warden or law enforcement officer issued a statement of intent to revoke, suspend, or deny hunting privileges and took possession of that person's hunting license. The hearing must be held within twenty-five days after the date the game warden or law enforcement officer issued a statement of intent to revoke, suspend, or deny hunting privileges and took possession of that person's hunting license, but the hearing officer may extend the hearing to within thirty-five days after the date the game warden or law enforcement officer issued a statement of intent to revoke, suspend, or deny hunting privileges and took possession of that person's hunting license if good cause is shown.
2. If the issue to be determined by the hearing concerns suspension of hunting privileges for being afield with a gun or other firearm or a bow and arrow while having

an alcohol, other drug, or a combination thereof concentration of at least ten one-hundredths of one percent by weight, the hearing must be before a hearing officer assigned by the director and at a time and place designated by the director. The hearing must be recorded and its scope may cover only the issues of whether the arresting warden or officer had reasonable grounds to believe the person had been afield with a gun or other firearm or bow and arrow in violation of section 20.1-01-06; whether the person was placed under arrest; whether the person was tested in accordance with section 20.1-15-01 or 20.1-15-04 and, if applicable, section 20.1-15-03; and whether the chemical test results show the person had an alcohol, other drug, or a combination thereof concentration of at least ten one-hundredths of one percent by weight. For purposes of this section, a copy of a certified copy of an analytical report of a blood, urine, or saliva sample from the state toxicologist, or a certified copy of the checklist and test records from a certified breath test operator establish prima facie the alcohol, other drug, or a combination thereof concentration shown therein. Whether the person was informed that the privilege to hunt might be suspended based on the results of the chemical test is not an issue.

3. If the issue to be determined by the hearing concerns revocation of hunting privileges for refusing to submit to a chemical test under section 20.1-15-01 or 20.1-15-15, the hearing must be before a hearing officer assigned by the director at a time and place designated by the director. The hearing must be recorded. The scope of a hearing for refusing to submit to a chemical test under section 20.1-15-01 may cover only the issues of whether a game warden or law enforcement officer had reasonable grounds to believe the person had been afield with a gun or other firearm or a bow and arrow in violation of section 20.1-01-06; whether the person was placed under arrest; and whether that person refused to submit to the chemical test. The scope of a hearing for refusing to submit to a chemical test under section 20.1-15-15 may cover only the issues of whether the game warden or law enforcement officer had reason to believe and had, through the officer's observations, formulated an opinion that the person's body contains alcohol, other drugs, or a combination thereof and whether the person refused to submit to the onsite screening test. Whether the person was informed that the privilege to hunt would be revoked or denied for refusal to submit to the test is not an issue.

4. At a hearing under this section, the regularly kept records of the director may be introduced. Those records establish prima facie their contents without further foundation. For purposes of this chapter, the following are deemed regularly kept records of the director: any copy of a certified copy of an analytical report of a blood, urine, or saliva sample received by the director from the state toxicologist or a game warden or a law enforcement officer, a certified copy of the checklist and test records received by the director from a certified breath test operator, and any copy of a certified copy of a certificate of the state toxicologist relating to approved methods, devices, operators, materials, and checklists used for testing for alcohol, other drug, or a combination thereof concentration received by the director from the state toxicologist, or the recorder, unless the board of county commissioners has designated a different official to maintain the certificate.

5. At the close of the hearing, the hearing officer shall notify the person of the hearing officer's findings of fact, conclusions of law, and decision based on the findings and

conclusions and shall immediately deliver to the person a copy of the decision. If the hearing officer does not find in favor of the person, the copy of the decision serves as the director's official notification to the person of the revocation, suspension, or denial of hunting privileges in this state. The hearing officer shall report the findings, conclusions, and decisions to the director within ten days of the conclusion of the hearing. If the hearing officer has determined in favor of the person, the director shall return the person's hunting license.

6. If the person who requested a hearing under this section fails to appear at the hearing without justification, the right to the hearing is waived, and the hearing officer's determination on the revocation, suspension, or denial of hunting privileges will be based on the written request for hearing, game warden's or law enforcement officer's report, and other evidence as may be available. The hearing officer shall, on the date for which the hearing is scheduled, mail to the person, by regular mail, at the address on file with the director, or at any other address for the person or the person's legal representative supplied in the request for hearing, a copy of the decision which serves as the director's official notification to the person of the revocation, suspension, or denial of hunting privileges in this state. Even if the person for whom the hearing is scheduled fails to appear at the hearing, the hearing is deemed to have been held on the date for which it is scheduled for purposes of appeal under section 20.1-15-09.

20.1-15-09. Judicial review.

Any person whose hunting privileges have been suspended, revoked, or denied by the decision of the hearing officer under section 20.1-15-08 may appeal within seven days after the date of the hearing under section 20.1-15-08 as shown by the date of the hearing officer's decision, notwithstanding section 28-32-42, by serving on the director and filing a notice of appeal and specifications of error in the district court in the county where the events occurred for which the demand for a chemical test was made or in the county in which the administrative hearing was held. The court shall set the matter for hearing, and the petitioner shall give twenty days' notice of the hearing to the director and to the hearing officer who rendered the decision. Neither the director nor the court may stay the decision pending decision on appeal. Within fifteen days after receipt of the notice of appeal, the director or the hearing officer who rendered the decision shall file in the office of the clerk of court to which the appeal is taken a certified transcript of the testimony and all other proceedings. This record is the record on which the appeal must be determined. No additional evidence may be heard. The court shall affirm the decision of the director or hearing officer unless it finds the evidence insufficient to warrant the conclusion reached by the director or hearing officer. The court may direct that the matter be returned to the director or hearing officer for rehearing and the presentation of additional evidence.

20.1-15-11. Interpretation of chemical tests.

Upon the trial of any action or proceeding arising out of acts alleged to have been committed by any person while being afield with a gun or other firearm or a bow and arrow while under the influence of intoxicating liquor, drugs, or a combination thereof,

evidence of the amount of alcohol, drugs, or a combination thereof in the person's blood at the time of the act alleged as shown by a chemical analysis of the blood, breath, saliva, or urine is admissible. For the purpose of this section:

1. A person having, at that time, an alcohol, other drug, or a combination thereof concentration of not more than five one-hundredths of one percent by weight is presumed not to be under the influence of intoxicating liquor, drugs, or a combination thereof.
2. Evidence that there was at that time more than five one-hundredths of one percent by weight alcohol, other drug, or a combination thereof concentration in a person is relevant evidence, but it is not to be given prima facie effect in indicating whether the person was under the influence of intoxicating liquor, drugs, or a combination thereof.
3. A person having an alcohol, other drug, or a combination thereof concentration of at least ten one-hundredths of one percent by weight at the time of the performance of a chemical test within two hours after being afield with a gun or other firearm or a bow and arrow is under the influence of intoxicating liquor, drugs, or a combination thereof at the time of being afield with a gun or other firearm or bow and arrow.
4. Alcohol concentration is based upon grams of alcohol per one hundred cubic centimeters of blood or grams of alcohol per two hundred ten liters of alveolar air or grams of alcohol per sixty-seven cubic centimeters of urine.
5. The results of the chemical test must be received in evidence when it is shown that the sample was properly obtained and the test was fairly administered, and if the test is shown to have been performed according to methods and with devices approved by the state toxicologist, and by an individual possessing a certificate of qualification to administer the test issued by the state toxicologist. The state toxicologist is authorized to approve satisfactory devices and methods of chemical tests and determine the qualifications of individuals to conduct such tests, and shall issue a certificate to every qualified operator. An operator shall exhibit the certificate upon demand of the person requested to take the chemical test.
6. The state toxicologist may appoint, train, certify, and supervise field inspectors of breath testing equipment and its operation, and the inspectors shall report the findings of any inspection to the state toxicologist for appropriate action. Upon approval of the methods or devices, or both, required to perform the tests and the persons qualified to administer them, the state toxicologist shall prepare and file written record of the approval with the director and the recorder in each county, unless the board of county commissioners designates a different official, and shall include in the record:
a. An annual register of the specific testing devices currently approved, including serial number, location, and the date and results of last inspection.
b. An annual register of currently qualified and certified operators of the devices, stating the date of certification and its expiration.
c. The operational checklist and forms prescribing the methods currently approved by the state toxicologist in using the devices during the administration of the tests.
The material filed under this section may be supplemented when the state toxicologist determines it to be necessary, and any supplemental material has the same force and effect as the material that it supplements.

7. Copies of the records referred to in subsections 5 and 6, certified by the recorder, or designated official, must be admitted as prima facie evidence of the matters stated in the records.
8. A certified copy of the analytical report of a blood, urine, or saliva test issued by the state toxicologist must be accepted as prima facie evidence of the results of a chemical test performed under this chapter.
9. Notwithstanding any statute or rule to the contrary, the defendant in any criminal proceeding may subpoena, without cost to the defendant, the person who conducted the chemical test referred to in this section to testify at the trial on the issue of the amount of alcohol, drugs, or a combination thereof in the defendant's blood, breath, saliva, or urine at the time of the alleged act.
10. A signed statement from the individual medically qualified to draw the blood sample for testing as set forth in subsection 5 is prima facie evidence that the blood sample was properly drawn and no further foundation for the admission of this evidence may be required.

20.1-15-12. Proof of refusal admissible in any action or proceeding.

If the person under arrest refuses to submit to the chemical test, proof of refusal is admissible in any action or proceeding arising out of acts alleged to have been committed while the person was afield with a gun or other firearm or bow and arrow while under the influence of intoxicating liquor, drugs, or a combination thereof.

20.1-15-13. Effect of evidence of chemical test.

This chapter does not limit the introduction of any other competent evidence bearing on the question of whether the person was under the influence of intoxicating liquor, drugs, or a combination thereof, but, if the chemical test results show an alcohol, other drug, or a combination thereof concentration of at least ten one-hundredths of one percent, the purpose of the evidence must be limited to the issues of probable cause, whether an arrest was made prior to the administering of the test, and the validity of the test results.

20.1-15-15. Screening tests.

Any person who is afield with a gun or other firearm or a bow and arrow is deemed to have given consent to submit to an onsite screening test of the person's breath for the purpose of estimating the alcohol, other drug, or a combination thereof content of the person's blood upon the request of a game warden or a law enforcement officer who has reason to believe and has, through the officer's observations, formulated an opinion that the person's body contains alcohol, other drugs, or a combination thereof. A person may not be required to submit to a screening test of breath while at a hospital as a patient if the medical practitioner in immediate charge of the person's case is not first notified of the proposal to make the requirement or objects to the test on the ground that such would be prejudicial to the proper care or treatment of the patient. The screening test must be performed by a game warden or an enforcement officer certified as a chemical test operator by the state toxicologist and according to methods and with

devices approved by the state toxicologist. The results of the screening test must be used only for determining whether a further test is to be given under the provisions of section 20.1-15-01. The officer shall inform the person that refusal of the person to submit to a screening test will result in a revocation for up to four years of that person's hunting privileges. If the person refuses to submit to the screening test, none may be given, but the refusal is sufficient cause to revoke the person's hunting privileges in the same manner as provided in section 20.1-15-06, and a hearing as provided in section 20.1-15-08 and a judicial review as provided in section 20.1-15-09 must be available. However, the director may not revoke a person's hunting privileges for refusing to submit to a screening test requested under this section if the person provides a sufficient breath, blood, or urine sample for a chemical test requested under section 20.1-15-01 for the same incident. This section does not supersede any provisions of sections 20.1-15-01 through 20.1-15-14, nor does any provision of sections 20.1-15-01 through 20.1-15-14 supersede this section except as provided herein. For the purposes of this section, "chemical test operator" means a person certified by the state toxicologist as qualified to perform analysis for alcohol, other drugs, or a combination thereof in a person's blood, breath, saliva, or urine.

TITLE 39

MOTOR VEHICLES

39-01-01. Definitions.

In this title, unless the context or subject matter otherwise requires:

15. "Driver" means every person who drives or is in actual physical control of a vehicle.
28. "Intoxicating liquor" means and includes any beverage containing alcohol.
68. "Semitrailer" includes every vehicle of the trailer type so designed and used in conjunction with a truck or truck tractor that some part of its own weight and that of its own load rests upon or is carried by a truck or truck tractor, except that it does not include a "housetrailer" or "mobile home" as defined in subsection 83.

39-06-32. Authority to suspend licenses.

The director may suspend the license of an operator, after hearing, upon proof by a fair preponderance of the evidence, that any of the following apply to the licensee:

7. An administrative decision on an Indian reservation or in another state that the licensee's privilege to drive on that Indian reservation or in that state is suspended or revoked because of a violation of that Indian reservation's or state's law forbidding motor vehicle operation with an alcohol concentration of at least eight one-hundredths of one percent by weight or, with respect to a person under twenty-one years of age, an alcohol concentration of at least two one-hundredths of one percent by weight, or

because of a violation of that Indian reservation's or state's law forbidding the driving or being in actual physical control of a commercial motor vehicle while having an alcohol concentration of at least four one-hundredths of one percent by weight. The specific requirements for establishing the violation on the Indian reservation or in the other state may not be considered and certified copies of the records of the Indian reservation's or other state's drivers licensing authority are sufficient evidence of the violation. The suspension must be for the same duration as the suspension in section 39-20-04.1, if the violation does not involve a commercial motor vehicle. If the violation involves a commercial motor vehicle, the period of suspension must be the same as the period of suspension provided in section 39-06.2-10. For purposes of this section, originals, photostatic copies, or electronic transmissions of the records of the drivers licensing or other authority of the other jurisdiction are sufficient evidence whether or not they are certified copies.

39-06.1-03. Administrative hearing - Procedures - Appeals - Stay orders.

1. A person cited for a traffic violation, other than an offense listed in section 39-06.1-05, who does not follow one of the procedures set forth in section 39-06.1-02, may request a hearing on the issue of commission of the violation charged. The hearing must be held at the time scheduled in the citation, at the time scheduled in response to the person's request, or at some future time, not to exceed ninety days later, set at that first appearance.
2. At the time of a request for a hearing on the issue of commission of the violation, the person charged shall deposit with the official having jurisdiction an appearance bond equal to the statutory fee for the violation charged.
3. If a person cited for a traffic violation, other than an offense listed in section 39-06.1-05, has requested a hearing on the issue of the commission of the violation charged and appears at the time scheduled for the hearing, and the state or city, as the case may be, does not appear or is not ready to prove the commission of a charged violation at the hearing, the official shall dismiss the charge.
4. If the official finds that the person had committed the traffic violation, the official shall notify the licensing authority of that fact, and whether the person was driving more than nine miles [14.48 kilometers] per hour in excess of the lawful limit, stating specifically the miles [kilometers] per hour in excess of the lawful limit, if charged with a speeding violation, within ten days of the date of the hearing. The fact that a person has admitted a violation, or has, in any proceeding, been found to have committed a violation, may not be referred to in any way, nor be admissible as evidence in any court, civil, equity, or criminal, except in an action or proceeding involving that person's driving license or privilege.
5. a. If a person is aggrieved by a finding that the person committed the violation, the person may, without payment of a filing fee, appeal that finding to the district court for trial anew. If, after trial in the appellate court, the person is again found to have committed the violation, there may be no further appeal. Notice of appeal under this subsection must be given within thirty days after a finding of commission of a violation is entered by the official. Oral notice of appeal may be given to the official at the time that the official adjudges that a violation has been committed. Otherwise, notice of appeal

must be in writing and filed with the official, and a copy of the notice must be served upon the prosecuting attorney. An appeal taken under this subsection may not operate to stay the reporting requirement of subsection 4, nor to stay appropriate action by the licensing authority upon receipt of that report.
b. The appellate court upon application by the appellant may:
(1) Order a stay of any action by the licensing authority during pendency of the appeal, but not to exceed a period of one hundred twenty days;
(2) Order a stay and that the appellant be issued a temporary restricted driving certificate by the licensing authority to be effective for no more than one hundred twenty days; or
(3) Deny the application.
An application for a stay or temporary certificate under this subdivision must be accompanied by a certified copy of the appellant's driving record, for the furnishing of which the licensing authority may charge a fee of three dollars. Any order granting a stay or a temporary certificate must be forwarded forthwith by the clerk of court to the licensing authority, which immediately shall issue a temporary certificate in accordance with the order in the manner provided by law. A court may not make a determination on an application under this subdivision without notice to the appropriate prosecuting attorney. A person who violates or exceeds the restrictions contained in any temporary restricted driving certificate issued pursuant to this subdivision is guilty of a traffic violation and must be assessed a fee of twenty dollars.
c. If the person charged is found not to have committed the violation by the appellate court, the clerk of court shall report that fact to the licensing authority immediately. If an appeal under this subsection is from a violation of a city ordinance, the city attorney for the city wherein the alleged violation occurred shall prosecute the appeal. In all other cases, the appropriate state's attorney shall prosecute the appeal.
6. The state or the city, as the case may be, must prove the commission of a charged violation at the hearing or appeal under this section by a fair preponderance of the evidence. Upon an appeal under subsection 5, the court and parties shall follow, to the extent applicable, the North Dakota Rules of Civil Procedure. If on the appeal from the finding of the official the finding is affirmed, costs may be assessed at the discretion of the trial judge.
7. As used in sections 39-06.1-02, 39-06.1-03, and 39-06.1-04, the word "official" means a municipal judge, or a magistrate or other qualified person appointed by the presiding judge of the judicial district, to serve as such official for all or a specified part of the judicial district.

39-06.1-10. Entries against driving record - Licensing authority duties - Hearings - Demerit schedule - Suspension.

7. The period of suspension imposed for a violation of section 39-08-01 or equivalent ordinance is:
a. Ninety-one days if the operator's record shows the person has not violated section 39-08-01 or equivalent ordinance within the five years preceding the last violation and the violation was for an alcohol concentration of at least eight one-hundredths of one percent by weight and under eighteen one-hundredths of one percent by weight.

b. One hundred eighty days if the operator's record shows the person has not violated section 39-08-01 or equivalent ordinance within five years preceding the last violation and the violation was for an alcohol concentration of at least eighteen one-hundredths of one percent by weight.
c. Three hundred sixty-five days if the operator's record shows the person has once violated section 39-08-01 or equivalent ordinance within the five years preceding the last violation and the violation is for an alcohol concentration of under eighteen one-hundredths of one percent by weight.
d. Two years if the operator's record shows the person has at least once violated section 39-08-01 or equivalent ordinance within the five years preceding the last violation and the violation was for an alcohol concentration of at least eighteen one-hundredths of one percent by weight or if the operator's record shows the person has at least twice violated section 39-08-01 or equivalent ordinance within the five years preceding the last violation and the violation was for an alcohol concentration of at least eight one-hundredths of one percent by weight and under eighteen one-hundredths of one percent by weight.
e. Three years if the operator's record shows the person has at least twice violated section 39-08-01 or equivalent ordinance within the five years preceding the last violation and the violation is for an alcohol concentration of at least eighteen one-hundredths of one percent by weight.

39-06.2-10.2. Implied consent requirements for commercial motor vehicle drivers.

1. A person who drives or is in actual physical control of a commercial motor vehicle within this state is deemed to have given consent to take a test or tests of that person's blood, breath, or urine for the purpose of determining that person's alcohol concentration, or the presence of other drugs. The result of any test administered within two hours of driving or being in actual physical control of a commercial motor vehicle is that person's alcohol concentration. The test must be conducted pursuant to the provisions of section 39-20-07.
2. A test or tests may be administered at the direction of a law enforcement officer who, after stopping or detaining the commercial motor vehicle driver, has probable cause to believe that driver was driving a commercial motor vehicle while having alcohol or drugs in the driver's system.
3. A person requested to submit to a test as provided in subsection 1 or 5 must be warned by the law enforcement officer requesting the test that a refusal to submit to the test will result in that person being immediately placed out of service for a period of twenty-four hours and being disqualified from operating a commercial motor vehicle for a period of not less than one year under section 39-06.2-10.
4. If the person refuses testing, or submits to a test that discloses an alcohol concentration of at least four one-hundredths of one percent by weight, the law enforcement officer must submit a certified report to the director certifying that the test was requested pursuant to subsection 1 or 5 and that the person refused to submit to testing, or submitted to a test under subsection 1 which disclosed an alcohol concentration of at least four one-hundredths of one percent by weight.

5. A person who drives or is in actual physical control of a commercial motor vehicle within this state is deemed to have given consent to an onsite alcohol screening test under section 39-20-14.
6. Upon receipt of the certified report of a law enforcement officer submitted under subsection 4, the director must disqualify the driver from driving a commercial motor vehicle under section 39-06.2-10.

39-06.2-10.3. Action following test result for a resident driver.

If a person submits to a test under section 39-06.2-10.2 and the test shows that person to have an alcohol concentration of at least four one-hundredths of one percent by weight at the time of the performance of a chemical test within two hours after the driving or being in actual physical control of a commercial motor vehicle, the following procedures apply:

1. When a breath sample test result derived under section 39-20-07 reveals a resident driver to have an alcohol concentration of at least four one-hundredths of one percent by weight, the law enforcement officer shall immediately take possession of the person's commercial driver's license. The law enforcement officer shall issue the driver an out-of-service order as provided for in section 39-06.2-10.9. If the driver then has valid driving privileges, the law enforcement officer must issue to the driver a temporary driver's permit, in accordance with section 39-06.2-10.8.
2. If a test administered under section 39-06.2-10.2 was by a urine or blood sample and the person tested is not a resident of an area in which the law enforcement officer has jurisdiction, the law enforcement officer shall, on receiving the analysis of the sample by the state toxicologist showing that person had an alcohol concentration of at least four one-hundredths of one percent by weight, either proceed in accordance with subsection 1 during that person's reappearance within the officer's jurisdiction or notify a law enforcement agency having jurisdiction where the person lives. On that notification, that law enforcement agency shall immediately take possession of the person's North Dakota commercial driver's license or permit and, within twenty-four hours, forward it and a copy of the temporary driver's permit to the halting officer. The law enforcement agency shall also, on taking possession of the person's commercial driver's license, issue to that person a temporary driver's permit according to section 39-06.2-10.8.
3. The halting officer, within five days of the issuance of the temporary driver's permit, shall forward to the director a certified written report in the form required by the director and the person's commercial driver's license taken under subsection 1 or 2. If the person was issued a temporary driver's permit because of the results of a test, the report must show that the officer had reasonable grounds to believe the person had been driving or was in actual physical control of a commercial motor vehicle while in violation of section 39-06.2-10.1, that the person was lawfully detained, that the person was tested for alcohol concentration under this chapter, and that the results of the test show that the person had an alcohol concentration of at least four one-hundredths of one percent by weight. In addition to the commercial driver's license and report, the law enforcement officer must forward to the director a certified copy of the operational checklist and test records of a breath test and a copy of the certified copy of the

analytical report for a blood or urine test for all tests administered at the direction of the officer.

39-06.2-10.4. Action following test result or refusal of testing by nonresident driver.

If a driver licensed in another state refuses, in this state, a test provided under section 39-06.2-10.2 or submits to a test under section 39-06.2-10.2, and the test results show an alcohol concentration of at least four one-hundredths of one percent by weight, the following procedures apply:

1. When a breath sample test result, derived under section 39-20-07, reveals the driver to have alcohol concentration of at least four one-hundredths of one percent by weight, the halting officer, without taking possession of the person's out-of-state driver's license, shall inform the driver of the test results and issue an out-of-service order according to section 39-06.2-10.9 and a temporary driver's permit according to section 39-06.2-10.8.
2. When a urine or blood sample test result, derived under section 39-20-07, reveals an alcohol concentration of at least four one-hundredths of one percent by weight, the halting officer shall mail the person a temporary driver's permit issued according to section 39-06.2-10.8 and a notice as provided under section 39-06.1-07.
3. The law enforcement officer, within five days of issuing the temporary driver's permit, shall forward to the director a certified written report in the form required by the director and a certified copy of the operational checklist and test records of a breath test and a copy of the certified copy of the analytical report for a blood or urine test for all tests administered at the direction of the officer. If the person was issued a temporary driver's permit because of the person's refusal to submit to a test under sections 39-06.2-10.2 and 39-20-14, the report must include information as provided in section 39-06.2-10.3. If the person was issued a temporary driver's permit because of the results of a test, the report must show that the officer had reasonable grounds to believe the person had been driving or was in actual physical control of a commercial motor vehicle while in violation of section 39-06.2-10.1, that the person was lawfully detained, that the person was tested for alcohol concentration under this chapter, and that the results of the test show that the person had an alcohol concentration of at least four one-hundredths of one percent by weight.

39-06.2-10.5. Revocation of privilege to drive commercial motor vehicle upon refusal to submit to testing.

If a person refuses to submit to testing under section 39-06.2-10.2, the law enforcement officer shall immediately take possession of the person's driver's license and issue to that person a temporary driver's permit. The director, upon the receipt of that person's driver's license and a certified written report of the law enforcement officer in the form required by the director, forwarded by the officer within five days after issuing the temporary driver's permit, showing that the officer had reasonable grounds to believe the person had been driving or was in actual physical control of a commercial motor vehicle while in violation of section 39-06.2-10.1 or, had reason to believe that the

person committed a moving traffic violation or was involved in a traffic accident as a driver, and in conjunction with the violation or accident the officer has, through the officer's observations, formulated an opinion that the person's body contains alcohol, that the person was lawfully detained, and that the person had refused to submit to the screening test under section 39-06.2-10.2, shall revoke that person's commercial driver's license or permit to drive and any nonresident commercial driver's privilege for the appropriate period under section 39-06.2-10, or if the person is a resident without a commercial driver's license or permit, the director shall deny to the person the issuance of a commercial driver's license or permit for the appropriate period under section 39-06.2-10 after the date of the alleged violation, subject to the opportunity for a prerevocation hearing and postrevocation review as provided in this chapter. In the revocation of the person's driver's license the director shall give credit for time in which the person was without a driver's license after the day of the person's refusal to submit to the test except that the director may not give credit for time in which the person retained driving privileges through a temporary driver's permit.

39-06.2-10.6. Administrative hearing on request.

1. Before issuing an order of suspension, revocation, or disqualification under section 39-06.2-10, the director shall afford that person an opportunity for a hearing as provided by section 39-20-05, if the person mails a request for the hearing to the director within ten days after the date of issuance of the temporary driver's permit.
2. If the issue to be determined by the hearing concerns license suspension for operating a commercial motor vehicle while having an alcohol concentration of at least four one-hundredths of one percent by weight, the hearing must be before a hearing officer assigned by the director and at a time and place designated by the director. The hearing must be recorded and its scope may cover only the issues of whether the arresting officer had reasonable grounds to believe the person had been driving or was in actual physical control of a commercial motor vehicle in violation of section 39-06.2-10.1, whether the person was lawfully detained, whether the person was tested in accordance with section 39-06.2-10.2, and whether the test results show the person had an alcohol concentration of at least four one-hundredths of one percent by weight. For purposes of this section, a copy of a certified copy of an analytical report of a blood or urine sample from the office of the state toxicologist, or a certified copy of the checklist and test records from a certified breath test operator establish prima facie the alcohol concentration shown therein. Whether the person was warned that the privilege to drive might be suspended based on the results of the test is not an issue.
3. If the issue to be determined by the hearing concerns license revocation for refusing to submit to a test under section 39-06.2-10.2, the hearing must be before a hearing officer assigned by the director at a time and place designated by the director. The hearing must be recorded. The scope of a hearing for refusing to submit to a test under section 39-06.2-10.2 may cover only the issues of whether a law enforcement officer had reasonable grounds to believe the person had been driving or was in actual physical control of a commercial motor vehicle in violation of section 39-06.2-10.1, whether the person was lawfully detained, and whether that person refused to submit to the test or tests. The scope of a hearing for refusing to submit to a test under subsection

3 of section 39-06.2-10.4 may cover only the issues of whether the law enforcement officer had reason to believe the person committed a moving traffic violation or was involved in a traffic accident as a driver, whether in conjunction with the violation or the accident the officer has, through the officer's observations, formulated an opinion that the person's body contains alcohol and, whether the person refused to submit to the onsite screening test. Whether the person was warned that the privilege to drive would be revoked or denied for refusal to submit to the test or tests is not an issue.

4. At a hearing under this section, the regularly kept records of the director may be introduced. Those records establish prima facie their contents without further foundation. For purposes of this chapter, the following are deemed regularly kept records of the director: any copy of a certified copy of an analytical report of a blood or urine sample received by the director from the office of the state toxicologist or a law enforcement officer, a certified copy of the checklist and test records received by the director from a certified breath test operator, and any copy of a certified copy of a certificate of the office of the state toxicologist relating to approved methods, devices, operators, materials, and checklists used for testing for alcohol concentration received by the director from the office of the state toxicologist, or the recorder, unless the board of county commissioners has designated a different official to maintain the certificate.

5. At the close of the hearing, the hearing officer shall notify the person of the hearing officer's findings of fact, conclusions of law, and decision based on the findings and conclusions and shall immediately deliver to the person a copy of the decision. If the hearing officer does not find in favor of the person, the copy of the decision serves as the director's official notification to the person of the revocation, suspension, or denial of driving privileges in this state. If the hearing officer finds, based on a preponderance of the evidence, that the person refused a test under section 39-06.2-10.2 or that the person had an alcohol concentration of at least four one-hundredths of one percent by weight, the hearing officer shall immediately take possession of the person's temporary driver's permit issued under this chapter. If the hearing officer does not find against the person, the hearing officer shall sign, date, and mark on the person's permit an extension of driving privileges for the next twenty days and shall return the permit to the person. The hearing officer shall report the findings, conclusions, and decisions to the director within ten days of the conclusion of the hearing. If the hearing officer has determined in favor of the person, the director shall return the person's commercial driver's license by regular mail to the address on file with the director under section 39-06.2-08.

6. If the person who requested a hearing under this section fails to appear at the hearing without justification, the right to the hearing is waived, and the hearing officer's determination on license revocation, suspension, or denial will be based on the written request for hearing, law enforcement officer's report, and other evidence as may be available. On the date for which the hearing is scheduled, the hearing officer shall mail to the person, by regular mail, at the address on file with the director under section 39-06-20, or at any other address for the person or the person's legal representative supplied in the request for hearing, a copy of the decision which serves as the director's official notification to the person of the revocation, suspension, or denial of driving privileges in this state. Even if the person for whom the hearing is scheduled fails to

appear at the hearing, the hearing is deemed to have been held on the date for which it is scheduled for purposes of appeal under section 39-06.2-10.7.

39-06.2-10.7. Judicial review.

Any person whose commercial driver's license or privilege has been suspended, revoked, or denied by the decision of the hearing officer under section 39-06.2-10.6 may appeal within seven days after the date of the hearing under section 39-06.2-10.6 as shown by the date of the hearing officer's decision, section 28-32-42 notwithstanding, by serving on the director and filing a notice of appeal and specifications of error in the district court in the county where the events occurred for which the demand for a test was made, or in the county in which the administrative hearing was held. The court shall set the matter for hearing, and the petitioner shall give twenty days' notice of the hearing to the director and to the hearing officer who rendered the decision. Neither the director nor the court may stay the decision pending decision on appeal. Within twenty days after receipt of the notice of appeal, the director or the hearing officer who rendered the decision shall file in the office of the clerk of court to which the appeal is taken a certified transcript of the testimony and all other proceedings. It is the record on which the appeal must be determined. No additional evidence may be heard. The court shall affirm the decision of the director or hearing officer unless it finds the evidence insufficient to warrant the conclusion reached by the director or hearing officer. The court may direct that the matter be returned to the director or hearing officer for rehearing and the presentation of additional evidence.

39-08-01. Persons under the influence of intoxicating liquor or any other drugs or substances not to operate vehicle - Penalty.

1. A person may not drive or be in actual physical control of any vehicle upon a highway or upon public or private areas to which the public has a right of access for vehicular use in this state if any of the following apply:
a. That person has an alcohol concentration of at least eight one-hundredths of one percent by weight at the time of the performance of a chemical test within two hours after the driving or being in actual physical control of a vehicle.
b. That person is under the influence of intoxicating liquor.
c. That person is under the influence of any drug or substance or combination of drugs or substances to a degree which renders that person incapable of safely driving.
d. That person is under the combined influence of alcohol and any other drugs or substances to a degree which renders that person incapable of safely driving.
The fact that any person charged with violating this section is or has been legally entitled to use alcohol or other drugs or substances is not a defense against any charge for violating this section, unless a drug which predominately caused impairment was used only as directed or cautioned by a practitioner who legally prescribed or dispensed the drug to that person.
2. A person violating this section or equivalent ordinance is guilty of a class B misdemeanor for the first or second offense in a five-year period, of a class A misdemeanor for a third offense in a five-year period, of a class A misdemeanor for the

fourth offense in a seven-year period, and of a class C felony for a fifth or subsequent offense in a seven-year period. The minimum penalty for violating this section is as provided in subsection 4. The court shall take judicial notice of the fact that an offense would be a subsequent offense if indicated by the records of the director or may make a subsequent offense finding based on other evidence.

3. Upon conviction, the court may order the motor vehicle number plates of the motor vehicle owned and operated by the offender at the time of the offense to be impounded for the duration of the period of suspension or revocation of the offender's driving privilege by the licensing authority. The impounded number plates must be sent to the director who must retain them for the period of suspension or revocation, subject to their disposition by the court.

4. A person convicted of violating this section, or an equivalent ordinance, must be sentenced in accordance with this subsection. For purposes of this subsection, unless the context otherwise requires, "drug court program" means a district court-supervised treatment program approved by the supreme court which combines judicial supervision with alcohol and drug testing and chemical addiction treatment in a licensed treatment program. The supreme court may adopt rules, including rules of procedure, for drug courts and the drug court program.

a. For a first offense, the sentence must include both a fine of at least two hundred fifty dollars and an order for addiction evaluation by an appropriate licensed addiction treatment program.

b. For a second offense within five years, the sentence must include at least five days' imprisonment or placement in a minimum security facility, of which forty-eight hours must be served consecutively, or thirty days' community service; a fine of at least five hundred dollars; and an order for addiction evaluation by an appropriate licensed addiction treatment program.

c. For a third offense within five years, the sentence must include at least sixty days' imprisonment or placement in a minimum security facility, of which forty-eight hours must be served consecutively; a fine of one thousand dollars; and an order for addiction evaluation by an appropriate licensed addiction treatment program.

d. For a fourth or subsequent offense within seven years, the sentence must include one hundred eighty days' imprisonment or placement in a minimum security facility, of which forty-eight hours must be served consecutively; a fine of one thousand dollars; and an order for addiction evaluation by an appropriate licensed treatment program.

e. The execution or imposition of sentence under this section may not be suspended or deferred under subsection 3 or 4 of section 12.1-32-02 for an offense subject to subdivision a or b. If the offense is subject to subdivision c or d, the district court may suspend a sentence, except for ten days' imprisonment, under subsection 3 or 4 of section 12.1-32-02 on the condition that the defendant first undergo and complete an evaluation for alcohol and substance abuse treatment and rehabilitation. If the defendant is found to be in need of alcohol and substance abuse treatment and rehabilitation, the district court may order the defendant placed under the supervision and management of the department of corrections and rehabilitation and is subject to the conditions of probation under section 12.1-32-07. The district court shall require the defendant to complete alcohol and substance abuse treatment and rehabilitation under the direction of the drug court program as a condition of probation in accordance with

rules adopted by the supreme court. If the district court finds that a defendant has failed to undergo an evaluation or complete treatment or has violated any condition of probation, the district court shall revoke the defendant's probation and shall sentence the defendant in accordance with this subsection.
f. For purposes of this section, conviction of an offense under a law or ordinance of another state which is equivalent to this section must be considered a prior offense if such offense was committed within the time limitations specified in this subsection.
g. If the penalty mandated by this section includes imprisonment or placement upon conviction of a violation of this section or equivalent ordinance, and if an addiction evaluation has indicated that the defendant needs treatment, the court may order the defendant to undergo treatment at an appropriate licensed addiction treatment program and the time spent by the defendant in the treatment must be credited as a portion of a sentence of imprisonment or placement under this section.
5. As used in subdivision b of subsection 4, the term "imprisonment" includes house arrest. As a condition of house arrest, a defendant may not consume alcoholic beverages. The house arrest must include a program of electronic home detention in which the defendant is tested at least twice daily for the consumption of alcohol. The defendant shall defray all costs associated with the electronic home detention. This subsection does not apply to individuals committed to or under the supervision and management of the department of corrections and rehabilitation.

39-08-01.4. Driving while under the influence of alcohol while being accompanied by a minor - Penalty.

It is a class A misdemeanor for an individual who is at least twenty-one years of age to violate section 39-08-01 if the violation occurred while a minor was accompanying the individual in a motor vehicle.

39-08-04. Accidents involving death or personal injuries - Penalty.

1. The driver of any vehicle involved in an accident resulting in injury to or death of any person shall immediately stop or return with the vehicle as close as possible to the scene of the accident and in every event shall remain at the scene of the accident until that driver has fulfilled the requirements of section 39-08-06. Every stop required by this section must be made without obstructing traffic more than is necessary.
2. Any person failing to comply with the requirements of this section under circumstances involving personal injury is guilty of a class A misdemeanor. Any person negligently failing to comply with the requirements of this section under circumstances involving serious personal injury is guilty of a class C felony. Any person negligently failing to comply with the requirements of this section under circumstances involving death is guilty of a class B felony.
3. The director shall revoke the license or permit to drive or nonresident operating privilege of a person convicted under this section.

39-08-18. Open container law - Penalty.

1. A person may not drink or consume alcoholic beverages, as defined in section 5-01-01, in or on any motor vehicle when the vehicle is upon a public highway or in an area used principally for public parking. A person may not have in that person's possession on that person's person while in or on a private motor vehicle upon a public highway or in an area used principally for public parking, any bottle or receptacle containing alcoholic beverages which has been opened, or the seal broken, or the contents of which have been partially removed. It is unlawful for the owner of any private motor vehicle or the driver, if the owner be not then present in or on the motor vehicle, to keep or allow to be kept in a motor vehicle when such vehicle is upon the public highway or in an area used principally for public parking any bottle or receptacle containing such alcoholic beverages which has been opened, or the seal broken, or the contents of which have been partially removed except when such bottle or receptacle is kept in the trunk of the motor vehicle when such vehicle is equipped with a trunk, or kept in some other area of the vehicle not normally occupied by the driver or passengers, if the motor vehicle is not equipped with a trunk. A utility compartment or glove compartment must be deemed to be within the area occupied by the driver and passengers. This subsection does not prohibit the consumption or possession of alcoholic beverages in a house car, as defined by subsection 25 of section 39-01-01, if the consumption or possession occurs in the area of the house car used as sleeping or living quarters and that area is separated from the driving compartment by a solid partition, door, curtain, or some similar means of separation; however, consumption is not authorized while the house car is in motion. Any person violating this subsection must be assessed a fee of fifty dollars; however, the licensing authority may not record the violation against the person's driving record unless the person was the driver of the motor vehicle at the time that the violation occurred.
2. Subsection 1 does not apply to a public conveyance that has been commercially chartered for group use, any passenger for compensation in a for-hire motor vehicle, or a privately owned motor vehicle operated by a person in the course of that person's usual employment transporting passengers at the employer's direction. This subsection does not authorize possession or consumption of an alcoholic beverage by the operator of any motor vehicle described in this subsection while upon a public highway or in an area used principally for public parking.

CHAPTER 39-20

CHEMICAL TEST FOR INTOXICATION, IMPLIED CONSENT

39-20-01. Implied consent to determine alcohol and drug content of blood.

Any person who operates a motor vehicle on a highway or on public or private areas to which the public has a right of access for vehicular use in this state is deemed to have given consent, and shall consent, subject to the provisions of this chapter, to a chemical test, or tests, of the blood, breath, saliva, or urine for the purpose of determining the

alcohol, other drug, or combination thereof, content of the blood. As used in this chapter the word "drug" means any drug or substance or combination of drugs or substances which renders a person incapable of safely driving, and the words "chemical test" or "chemical analysis" mean any test to determine the alcohol, or other drug, or combination thereof, content of the blood, breath, saliva, or urine, approved by the state toxicologist under this chapter. The test or tests must be administered at the direction of a law enforcement officer only after placing the person, except persons mentioned in section 39-20-03, under arrest and informing that person that the person is or will be charged with the offense of driving or being in actual physical control of a vehicle upon the public highways while under the influence of intoxicating liquor, drugs, or a combination thereof. For the purposes of this chapter, the taking into custody of a child under section 27-20-13 or a person under twenty-one years of age satisfies the requirement of an arrest. The law enforcement officer shall also inform the person charged that refusal of the person to submit to the test determined appropriate will result in a revocation for up to three years of the person's driving privileges. The law enforcement officer shall determine which of the tests is to be used. When a person under the age of eighteen years is taken into custody for violating section 39-08-01 or an equivalent ordinance, the law enforcement officer shall attempt to contact the person's parent or legal guardian to explain the cause for the custody. Neither the law enforcement officer's efforts to contact, nor any consultation with, a parent or legal guardian may be permitted to interfere with the administration of chemical testing requirements under this chapter. The law enforcement officer shall mail a notice to the parent or legal guardian of the minor within ten days after the test results are received or within ten days after the minor is taken into custody if the minor refuses to submit to testing. The notice must contain a statement of the test performed and the results of that test; or if the minor refuses to submit to the testing, a statement notifying of that fact. The attempt to contact or the contacting or notification of a parent or legal guardian is not a precondition to the admissibility of chemical test results or the finding of a consent to, or refusal of, chemical testing by the person in custody.

39-20-01.1. Chemical test of driver in serious bodily injury or fatal crashes.

Notwithstanding section 39-20-01 or 39-20-04, when the driver of a vehicle is involved in an accident resulting in the death or serious bodily injury, as defined in section 12.1-01-04, of another person, and there is probable cause to believe that the driver is in violation of section 39-08-01, the driver may be compelled by a police officer to submit to a test or tests of the driver's blood, breath, saliva, or urine to determine the alcohol concentration or the presence of other drugs or substances.

39-20-02. Persons qualified to administer test and opportunity for additional test.

Only an individual medically qualified to draw blood, acting at the request of a law enforcement officer, may withdraw blood for the purpose of determining the alcohol, drug, or combination thereof, content therein. The state toxicologist shall determine the qualifications or credentials for being medically qualified to draw blood, and shall issue a list of approved designations including medical doctor and registered nurse. This

limitation does not apply to the taking of breath, saliva, or urine specimen. The person tested may have an individual of the person's choosing, who is medically qualified to draw blood, administer a chemical test or tests in addition to any administered at the direction of a law enforcement officer with all costs of an additional test or tests to be the sole responsibility of the person charged. The failure or inability to obtain an additional test by a person does not preclude the admission of the test or tests taken at the direction of a law enforcement officer. Upon the request of the person who is tested, a copy of the operational checklist and test record of a breath sample test or analytical report of a blood, urine, or saliva sample test taken at the direction of the law enforcement officer must be made available to that person by the law enforcement agency that administered the test or tests.

39-20-03. Consent of person incapable of refusal not withdrawn.

Any person who is dead, unconscious, or otherwise in a condition rendering the person incapable of refusal, must be deemed not to have withdrawn the consent provided by section 39-20-01 and the test or tests may be given.

39-20-03.1. Action following test result for a resident operator.

If a person submits to a test under section 39-20-01, 39-20-02, or 39-20-03 and the test shows that person to have an alcohol concentration of at least eight one-hundredths of one percent by weight or, with respect to a person under twenty-one years of age, an alcohol concentration of at least two one-hundredths of one percent by weight at the time of the performance of a chemical test within two hours after the driving or being in actual physical control of a vehicle, the following procedures apply:

1. The law enforcement officer shall immediately take possession of the person's operator's license if it is then available and shall immediately issue to that person a temporary operator's permit if the person then has valid operating privileges, extending driving privileges for the next twenty-five days, or until earlier terminated by the decision of a hearing officer under section 39-20-05. The law enforcement officer shall sign and note the date on the temporary operator's permit. The temporary operator's permit serves as the director's official notification to the person of the director's intent to revoke, suspend, or deny driving privileges in this state.
2. If a test administered under section 39-20-01 or 39-20-03 was by saliva or urine sample or by drawing blood as provided in section 39-20-02 and the person tested is not a resident of an area in which the law enforcement officer has jurisdiction, the law enforcement officer shall, on receiving the analysis of the saliva, urine, or blood from the state toxicologist and if the analysis shows that person had an alcohol concentration of at least eight one-hundredths of one percent by weight or, with respect to a person under twenty-one years of age, an alcohol concentration of at least two one-hundredths of one percent by weight, either proceed in accordance with subsection 1 during that person's reappearance within the officer's jurisdiction or notify a law enforcement agency having jurisdiction where the person lives. On that notification, that law enforcement agency shall immediately take possession of the person's North Dakota

operator's license or permit if it is then available and, within twenty-four hours, forward the license and a copy of the temporary operator's permit to the law enforcement agency making the arrest or to the director. The law enforcement agency shall also, on taking possession of the person's operator's license, issue to that person a temporary operator's permit as provided in this section, and shall sign and date the permit as provided in subsection 1. The temporary operator's permit serves as the director's official notification to the person of the director's intent to revoke, suspend, or deny driving privileges in this state.
3. The law enforcement officer, within five days of the issuance of the temporary operator's permit, shall forward to the director a certified written report in the form required by the director and the person's operator's license taken under subsection 1 or 2. If the person was issued a temporary operator's permit because of the results of a test, the report must show that the officer had reasonable grounds to believe the person had been driving or was in actual physical control of a motor vehicle while in violation of section 39-08-01, or equivalent ordinance, that the person was lawfully arrested, that the person was tested for alcohol concentration under this chapter, and that the results of the test show that the person had an alcohol concentration of at least eight one-hundredths of one percent by weight or, with respect to a person under twenty-one years of age, an alcohol concentration of at least two one-hundredths of one percent by weight. In addition to the operator's license and report, the law enforcement officer shall forward to the director a certified copy of the operational checklist and test records of a breath test and a copy of the certified copy of the analytical report for a blood, saliva, or urine test for all tests administered at the direction of the officer.

39-20-03.2. Action following test result or on refusing test by nonresident operator.

If a person licensed in another state refuses in this state to submit to a test provided under section 39-20-01 or 39-20-14, or who submits to a test under section 39-20-01, 39-20-02, or 39-20-03 and the test results show the person to have an alcohol concentration of at least eight one-hundredths of one percent by weight or, with respect to a person under twenty-one years of age, an alcohol concentration of at least two one-hundredths of one percent by weight at the time of performance of a test within two hours after driving or being in physical control of a motor vehicle, the following procedures apply:

1. Without taking possession of the person's out-of-state operator's license, the law enforcement officer shall issue to the person a notification of the test results and a temporary operator's permit extending nonresident operating privileges in this state for twenty-five days from the date of issuance or until earlier terminated by the decision of a hearing officer under section 39-20-05. The temporary permit must be signed and dated by the officer and serves as the director's official notification to the person of the director's intent to revoke, suspend, or deny driving privileges in this state, and of the hearing procedures under this chapter.
2. If the test was administered by saliva or urine sample or by drawing blood, the law enforcement officer, on reviewing the alcohol concentration analysis showing the person

had an alcohol concentration of at least eight one-hundredths of one percent by weight or, with respect to a person under twenty-one years of age, an alcohol concentration of at least two one-hundredths of one percent by weight, shall mail or issue to the person a notification of the test results, a temporary operator's permit extending nonresident operating privileges in this state for twenty-five days from the date of mailing or issuance or until earlier terminated by the decision of a hearing officer under section 39-20-05, and notice of the intent to revoke, suspend, or deny driving privileges in this state, together with the notice provided under section 39-06.1-07 of the procedures available under this chapter. The temporary operator's permit must be signed and dated by the officer.
3. The law enforcement officer, within five days of issuing the temporary operator's permit, shall forward to the director a certified written report in the form required by the director and a certified copy of the operational checklist and test records of a breath test and a copy of the certified copy of the analytical report for a blood, saliva, or urine test for all tests administered at the direction of the officer. If the person was issued a temporary operator's permit because of the person's refusal to submit to a test under sections 39-20-01 and 39-20-14, the report must include information as provided in section 39-20-04. If the person was issued a temporary operator's permit because of the results of a test, the report must show that the officer had reasonable grounds to believe the person had been driving or was in actual physical control of a motor vehicle while in violation of section 39-08-01, or equivalent ordinance, that the person was lawfully arrested, that the person was tested for alcohol concentration under this chapter, and that the results of the test show that the person had an alcohol concentration of at least eight one-hundredths of one percent by weight or, with respect to a person under twenty-one years of age, an alcohol concentration of at least two one-hundredths of one percent by weight.

39-20-04. Revocation of privilege to drive motor vehicle upon refusal to submit to testing.

1. If a person refuses to submit to testing under section 39-20-01 or 39-20-14, none may be given, but the law enforcement officer shall immediately take possession of the person's operator's license if it is then available and shall immediately issue to that person a temporary operator's permit, if the person then has valid operating privileges, extending driving privileges for the next twenty-five days or until earlier terminated by a decision of a hearing officer under section 39-20-05. The law enforcement officer shall sign and note the date on the temporary operator's permit. The temporary operator's permit serves as the director's official notification to the person of the director's intent to revoke driving privileges in this state and of the hearing procedures under this chapter. The director, upon the receipt of that person's operator's license and a certified written report of the law enforcement officer in the form required by the director, forwarded by the officer within five days after issuing the temporary operator's permit, showing that the officer had reasonable grounds to believe the person had been driving or was in actual physical control of a motor vehicle while in violation of section 39-08-01 or equivalent ordinance or, for purposes of section 39-20-14, had reason to believe that the person committed a moving traffic violation or was involved in a traffic accident as a

driver, and in conjunction with the violation or accident the officer has, through the officer's observations, formulated an opinion that the person's body contains alcohol, that the person was lawfully arrested if applicable, and that the person had refused to submit to the test or tests under section 39-20-01 or 39-20-14, shall revoke that person's license or permit to drive and any nonresident operating privilege for the appropriate period under this section, or if the person is a resident without a license or a permit to operate a motor vehicle in this state, the director shall deny to the person the issuance of a license or permit for the appropriate period under this section after the date of the alleged violation, subject to the opportunity for a prerevocation hearing and postrevocation review as provided in this chapter. In the revocation of the person's operator's license the director shall give credit for time in which the person was without an operator's license after the day of the person's refusal to submit to the test except that the director may not give credit for time in which the person retained driving privileges through a temporary operator's permit issued under this section or section 39-20-03.2. The period of revocation or denial of issuance of a license or permit under this section is:

a. One year if the person's driving record shows that within the five years preceding the most recent violation of this section, the person's operator's license has not previously been suspended, revoked, or issuance denied for a violation of this chapter or section 39-08-01 or equivalent ordinance.

b. Three years if the person's driving record shows that within the five years preceding the most recent violation of this section, the person's operator's license has been once previously suspended, revoked, or issuance denied for a violation of this chapter or section 39-08-01 or equivalent ordinance.

c. Four years if the person's driving record shows that within the five years preceding the most recent violation of this section, the person's operator's license has at least twice previously been suspended, revoked, or issuance denied under this chapter, or for a violation of section 39-08-01 or equivalent ordinance, or any combination of the same, and the suspensions, revocations, or denials resulted from at least two separate arrests.

2. A person's driving privileges are not subject to revocation under subdivision a of subsection 1 if all of the following criteria are met:

a. An administrative hearing is not held under section 39-20-05;

b. The person mails an affidavit to the director within twenty-five days after the temporary operator's permit is issued. The affidavit must state that the person:

(1) Intends to voluntarily plead guilty to violating section 39-08-01 or equivalent ordinance within twenty-five days after the temporary operator's permit is issued;

(2) Agrees that the person's driving privileges must be suspended as provided under section 39-06.1-10;

(3) Acknowledges the right to a section 39-20-05 administrative hearing and section 39-20-06 judicial review and voluntarily and knowingly waives these rights; and

(4) Agrees that the person's driving privileges must be revoked as provided under this section without an administrative hearing or judicial review, if the person does not plead guilty within twenty-five days after the temporary operator's permit is issued, or the court does not accept the guilty plea, or the guilty plea is withdrawn;

c. The person pleads guilty to violating section 39-08-01 or equivalent ordinance within twenty-five days after the temporary operator's permit is issued;

d. The court accepts the person's guilty plea and a notice of that fact is mailed to the director within twenty-five days after the temporary operator's permit is issued;
e. A copy of the final order or judgment of conviction evidencing the acceptance of the person's guilty plea is received by the director prior to the return or reinstatement of the person's driving privileges; and
f. The person has never been convicted under section 39-08-01.
3. The court must mail a copy of an order granting a withdrawal of a guilty plea to violating section 39-08-01, or equivalent ordinance, to the director within ten days after it is ordered. Upon receipt of the order, the director shall immediately revoke the person's driving privileges as provided under this section without providing an administrative hearing.

39-20-04.1. Administrative sanction for driving or being in physical control of a vehicle while having certain alcohol concentration.

1. After the receipt of a person's operator's license, if taken under section 39-20-03.1 or 39-20-03.2, and the certified report of a law enforcement officer and if no written request for hearing has been received from the arrested person under section 39-20-05, or if that hearing is requested and the findings, conclusion, and decision from the hearing confirm that the law enforcement officer had reasonable grounds to arrest the person and test results show that the arrested person was driving or in physical control of a vehicle while having an alcohol concentration of at least eight one-hundredths of one percent by weight or, with respect to a person under twenty-one years of age, an alcohol concentration of at least two one-hundredths of one percent by weight at the time of the performance of a test within two hours after driving or being in physical control of a motor vehicle, the director shall suspend the person's operator's license as follows:
a. For ninety-one days if the person's driving record shows that, within the five years preceding the date of the arrest, the person has not previously violated section 39-08-01 or equivalent ordinance or the person's operator's license has not previously been suspended or revoked under this chapter and the violation was for an alcohol concentration of at least eight one-hundredths of one percent by weight and under eighteen one-hundredths of one percent by weight.
b. For one hundred eighty days if the operator's record shows the person has not violated section 39-08-01 or equivalent ordinance within five years preceding the last violation and the last violation was for an alcohol concentration of at least eighteen one-hundredths of one percent by weight.
c. For three hundred sixty-five days if the person's driving record shows that, within the five years preceding the date of the arrest, the person has once previously violated section 39-08-01 or equivalent ordinance or the person's operator's license has once previously been suspended or revoked under this chapter with the last violation or suspension for an alcohol concentration under eighteen one-hundredths of one percent by weight.
d. For two years if the person's driving record shows that within the five years preceding the date of the arrest, the person's operator's license has once been suspended, revoked, or issuance denied under this chapter, or for a violation of section 39-08-01 or

equivalent ordinance for an alcohol concentration at least eighteen one-hundredths of one percent by weight or if the person's driving record shows that within the five years preceding the date of arrest, the person's operator's license has at least twice previously been suspended, revoked, or issuance denied under this chapter, or for a violation of section 39-08-01 or equivalent ordinance, or any combination thereof, and the suspensions, revocations, or denials resulted from at least two separate arrests with the last violation or suspension for an alcohol concentration of under eighteen one-hundredths of one percent by weight.
e. For three years if the operator's record shows that within five years preceding the date of the arrest, the person's operator's license has at least twice previously been suspended, revoked, or issuance denied under this chapter, or for a violation of section 39-08-01 or equivalent ordinance, or any combination thereof, and the suspensions, revocations, or denials resulted from at least two separate arrests and the last violation or suspension was for an alcohol concentration of at least eighteen one-hundredths of one percent by weight.
2. In the suspension of the person's operator's license the director shall give credit for the time the person was without an operator's license after the day of the offense, except that the director may not give credit for the time the person retained driving privileges through a temporary operator's permit issued under section 39-20-03.1 or 39-20-03.2.

39-20-05. Administrative hearing on request.

1. Before issuing an order of suspension, revocation, or denial under section 39-20-04 or 39-20-04.1, the director shall afford that person an opportunity for a hearing if the person mails or communicates by other means authorized by the director a request for the hearing to the director within ten days after the date of issuance of the temporary operator's permit. The hearing must be held within thirty days after the date of issuance of the temporary operator's permit. If no hearing is requested within the time limits in this section, and no affidavit is submitted within the time limits under subsection 2 of section 39-20-04, the expiration of the temporary operator's permit serves as the director's official notification to the person of the revocation, suspension, or denial of driving privileges in this state.
2. If the issue to be determined by the hearing concerns license suspension for operating a motor vehicle while having an alcohol concentration of at least eight one-hundredths of one percent by weight or, with respect to a person under twenty-one years of age, an alcohol concentration of at least two one-hundredths of one percent by weight, the hearing must be before a hearing officer assigned by the director and at a time and place designated by the director. The hearing must be recorded and its scope may cover only the issues of whether the arresting officer had reasonable grounds to believe the person had been driving or was in actual physical control of a vehicle in violation of section 39-08-01 or equivalent ordinance or, with respect to a person under twenty-one years of age, the person had been driving or was in actual physical control of a vehicle while having an alcohol concentration of at least two one-hundredths of one percent by weight; whether the person was placed under arrest, unless the person was under twenty-one years of age and the alcohol concentration was less than eight one-

hundredths of one percent by weight, then arrest is not required and is not an issue under any provision of this chapter; whether the person was tested in accordance with section 39-20-01 or 39-20-03 and, if applicable, section 39-20-02; and whether the test results show the person had an alcohol concentration of at least eight one-hundredths of one percent by weight or, with respect to a person under twenty-one years of age, an alcohol concentration of at least two one-hundredths of one percent by weight. For purposes of this section, a copy of a certified copy of an analytical report of a blood, urine, or saliva sample from the state toxicologist or a certified copy of the checklist and test records from a certified breath test operator establish prima facie the alcohol concentration shown therein. Whether the person was informed that the privilege to drive might be suspended based on the results of the test is not an issue.

3. If the issue to be determined by the hearing concerns license revocation for refusing to submit to a test under section 39-20-01 or 39-20-14, the hearing must be before a hearing officer assigned by the director at a time and place designated by the director. The hearing must be recorded. The scope of a hearing for refusing to submit to a test under section 39-20-01 may cover only the issues of whether a law enforcement officer had reasonable grounds to believe the person had been driving or was in actual physical control of a vehicle in violation of section 39-08-01 or equivalent ordinance or, with respect to a person under twenty-one years of age, the person had been driving or was in actual physical control of a vehicle while having an alcohol concentration of at least two one-hundredths of one percent by weight; whether the person was placed under arrest; and whether that person refused to submit to the test or tests. The scope of a hearing for refusing to submit to a test under section 39-20-14 may cover only the issues of whether the law enforcement officer had reason to believe the person committed a moving traffic violation or was involved in a traffic accident as a driver, whether in conjunction with the violation or the accident the officer has, through the officer's observations, formulated an opinion that the person's body contains alcohol and, whether the person refused to submit to the onsite screening test. Whether the person was informed that the privilege to drive would be revoked or denied for refusal to submit to the test or tests is not an issue.

4. At a hearing under this section, the regularly kept records of the director may be introduced. Those records establish prima facie their contents without further foundation. For purposes of this chapter, the following are deemed regularly kept records of the director: any copy of a certified copy of an analytical report of a blood, urine, or saliva sample received by the director from the state toxicologist or a law enforcement officer, a certified copy of the checklist and test records received by the director from a certified breath test operator, and any copy of a certified copy of a certificate of the state toxicologist relating to approved methods, devices, operators, materials, and checklists used for testing for alcohol concentration received by the director from the state toxicologist, or the recorder, unless the board of county commissioners has designated a different official to maintain the certificate.

5. At the close of the hearing, the hearing officer shall notify the person of the hearing officer's findings of fact, conclusions of law, and decision based on the findings and conclusions and shall immediately deliver to the person a copy of the decision. If the hearing officer does not find in favor of the person, the copy of the decision serves as the director's official notification to the person of the revocation, suspension, or denial of

driving privileges in this state. If the hearing officer finds, based on a preponderance of the evidence, that the person refused a test under section 39-20-01 or 39-20-14 or that the person had an alcohol concentration of at least eight one-hundredths of one percent by weight or, with respect to a person under twenty-one years of age, an alcohol concentration of at least two one-hundredths of one percent by weight, the hearing officer shall immediately take possession of the person's temporary operator's permit issued under this chapter. If the hearing officer does not find against the person, the hearing officer shall sign, date, and mark on the person's permit an extension of driving privileges for the next twenty days and shall return the permit to the person. The hearing officer shall report the findings, conclusions, and decisions to the director within ten days of the conclusion of the hearing. If the hearing officer has determined in favor of the person, the director shall return the person's operator's license by regular mail to the address on file with the director under section 39-06-20.

6. If the person who requested a hearing under this section fails to appear at the hearing without justification, the right to the hearing is waived, and the hearing officer's determination on license revocation, suspension, or denial will be based on the written request for hearing, law enforcement officer's report, and other evidence as may be available. The hearing officer shall, on the date for which the hearing is scheduled, mail to the person, by regular mail, at the address on file with the director under section 39-06-20, or at any other address for the person or the person's legal representative supplied in the request for hearing, a copy of the decision which serves as the director's official notification to the person of the revocation, suspension, or denial of driving privileges in this state. Even if the person for whom the hearing is scheduled fails to appear at the hearing, the hearing is deemed to have been held on the date for which it is scheduled for purposes of appeal under section 39-20-06.

39-20-06. Judicial review.

Any person whose operator's license or privilege has been suspended, revoked, or denied by the decision of the hearing officer under section 39-20-05 may appeal within seven days after the date of the hearing under section 39-20-05 as shown by the date of the hearing officer's decision, section 28-32-42 notwithstanding, by serving on the director and filing a notice of appeal and specifications of error in the district court in the county where the events occurred for which the demand for a test was made, or in the county in which the administrative hearing was held. The court shall set the matter for hearing, and the petitioner shall give twenty days' notice of the hearing to the director and to the hearing officer who rendered the decision. Neither the director nor the court may stay the decision pending decision on appeal. Within twenty days after receipt of the notice of appeal, the director or the hearing officer who rendered the decision shall file in the office of the clerk of court to which the appeal is taken a certified transcript of the testimony and all other proceedings. It is the record on which the appeal must be determined. No additional evidence may be heard. The court shall affirm the decision of the director or hearing officer unless it finds the evidence insufficient to warrant the conclusion reached by the director or hearing officer. The court may direct that the matter be returned to the director or hearing officer for rehearing and the presentation of additional evidence.

39-20-07. Interpretation of chemical tests.

Upon the trial of any civil or criminal action or proceeding arising out of acts alleged to have been committed by any person while driving or in actual physical control of a motor vehicle while under the influence of intoxicating liquor, drugs, or a combination thereof, evidence of the amount of alcohol, drugs, or a combination thereof in the person's blood at the time of the act alleged as shown by a chemical analysis of the blood, breath, saliva, or urine is admissible. For the purpose of this section:

1. A person having, at that time, an alcohol concentration of not more than five one-hundredths of one percent by weight is presumed not to be under the influence of intoxicating liquor. This presumption has no application to the administration of chapter 39-06.2.
2. Evidence that there was at that time more than five one-hundredths of one percent by weight alcohol concentration in a person is relevant evidence, but it is not to be given prima facie effect in indicating whether the person was under the influence of intoxicating liquor.
3. A person having an alcohol concentration of at least eight one-hundredths of one percent by weight or, with respect to a person under twenty-one years of age, an alcohol concentration of at least two one-hundredths of one percent by weight at the time of the performance of a chemical test within two hours after driving or being in physical control of a vehicle is under the influence of intoxicating liquor at the time of driving or being in physical control of a vehicle.
4. Alcohol concentration is based upon grams of alcohol per one hundred milliliters of blood or grams of alcohol per two hundred ten liters of alveolar air or grams of alcohol per sixty-seven milliliters of urine.
5. The results of the chemical analysis must be received in evidence when it is shown that the sample was properly obtained and the test was fairly administered, and if the test is shown to have been performed according to methods and with devices approved by the state toxicologist, and by an individual possessing a certificate of qualification to administer the test issued by the state toxicologist. The state toxicologist is authorized to approve satisfactory devices and methods of chemical analysis and determine the qualifications of individuals to conduct such analysis, and shall issue a certificate to all qualified operators who exhibit the certificate upon demand of the person requested to take the chemical test.
6. The state toxicologist may appoint, train, certify, and supervise field inspectors of breath testing equipment and its operation, and the inspectors shall report the findings of any inspection to the state toxicologist for appropriate action. Upon approval of the methods or devices, or both, required to perform the tests and the persons qualified to administer them, the state toxicologist shall prepare and file written record of the approval with the director and the recorder in each county, unless the board of county commissioners designates a different official, and shall include in the record:
a. An annual register of the specific testing devices currently approved, including serial number, location, and the date and results of last inspection.

b. An annual register of currently qualified and certified operators of the devices, stating the date of certification and its expiration.
c. The operational checklist and forms prescribing the methods currently approved by the state toxicologist in using the devices during the administration of the tests.
The material filed under this section may be supplemented when the state toxicologist determines it to be necessary, and any supplemental material has the same force and effect as the material that it supplements.
7. Copies of the records referred to in subsections 5 and 6, certified by the recorder, or designated official, must be admitted as prima facie evidence of the matters stated in the records.
8. A certified copy of the analytical report of a blood, urine, or saliva analysis referred to in subsection 5 and which is issued by the state toxicologist must be accepted as prima facie evidence of the results of a chemical analysis performed under this chapter. The certified copy satisfies the directives of subsection 5.
9. Notwithstanding any statute or rule to the contrary, a defendant who has been found to be indigent by the court in the criminal proceeding at issue may subpoena, without cost to the defendant, the person who conducted the chemical analysis referred to in this section to testify at the trial on the issue of the amount of alcohol, drugs, or a combination thereof in the defendant's blood, breath, saliva, or urine at the time of the alleged act. If the state toxicologist, the director of the state crime laboratory, or any employee of either, is subpoenaed to testify by a defendant who is not indigent and the defendant does not call the witness to establish relevant evidence, the court shall order the defendant to pay costs to the witness as provided in section 31-01-16.
10. A signed statement from the individual medically qualified to draw the blood sample for testing as set forth in subsection 5 is prima facie evidence that the blood sample was properly drawn and no further foundation for the admission of this evidence may be required.

39-20-08. Proof of refusal admissible in any civil or criminal action or proceeding.

If the person under arrest refuses to submit to the test or tests, proof of refusal is admissible in any civil or criminal action or proceeding arising out of acts alleged to have been committed while the person was driving or in actual physical control of a vehicle upon the public highways while under the influence of intoxicating liquor, drugs, or a combination thereof.

39-20-09. Effect of evidence of chemical test.

This chapter does not limit the introduction of any other competent evidence bearing on the question of whether the person was under the influence of intoxicating liquor, drugs, or a combination thereof, but, if the test results show an alcohol concentration of at least eight one-hundredths of one percent or, with respect to a person under twenty-one years of age, an alcohol concentration of at least two one-hundredths of one percent by weight, the purpose of such evidence must be limited to the issues of probable cause, whether an arrest was made prior to the administering of the test, and the validity of the test results.

39-20-13. State toxicologist to examine specimens of fatalities in accidental deaths involving a motor vehicle - Record use.

In cases of death resulting from a motor vehicle accident or other unnatural death occurring in a motor vehicle, the county coroner shall require that specimens of blood, urine, and vitreous humor be withdrawn from the body of the decedent within twenty-four hours after the decedent's death by a coroner, coroner's physician, or other qualified person, prior to embalming. The specimens must be collected and preserved by methods and techniques established by the state toxicologist. The specimens so drawn must be sent to the state toxicologist for analysis for alcohol, carbon monoxide, and other drug content. The state toxicologist shall keep a record of all such examinations to be used for statistical purposes. The records must be made available to the director for use by the national highway traffic safety administration in analyzing fatal accidents. The information in the possession of the director may be obtained from the state toxicologist only as provided in this section. Except as provided, the results of the examinations referred to in this section must be used only for statistical purposes, except that the results must be released upon the issuance of a subpoena duces tecum by a court of competent jurisdiction in any civil or criminal action. The cumulative results of the examinations, without identifying the individuals involved, must be disseminated to interested state and local officials and made public by the state toxicologist. Any person drawing the specimens and any person making any examination under the terms of this section are immune from all liability, civil or criminal, that might otherwise be incurred or imposed. The individual drawing the specimens must be paid a fee of five dollars by the state toxicologist for each acceptable specimen submitted for analysis under the requirements of this section.

39-20-14. Screening tests.

Any person who operates a motor vehicle upon the public highways of this state is deemed to have given consent to submit to an onsite screening test or tests of the person's breath for the purpose of estimating the alcohol content of the person's blood upon the request of a law enforcement officer who has reason to believe that the person committed a moving traffic violation or was involved in a traffic accident as a driver, and in conjunction with the violation or the accident the officer has, through the officer's observations, formulated an opinion that the person's body contains alcohol. A person may not be required to submit to a screening test or tests of breath while at a hospital as a patient if the medical practitioner in immediate charge of the person's case is not first notified of the proposal to make the requirement, or objects to the test or tests on the ground that such would be prejudicial to the proper care or treatment of the patient. The screening test or tests must be performed by an enforcement officer certified as a chemical test operator by the state toxicologist and according to methods and with devices approved by the state toxicologist. The results of such screening test must be used only for determining whether or not a further test shall be given under the provisions of section 39-20-01. The officer shall inform the person that refusal of the person to submit to a screening test will result in a revocation for up to three years of

that person's driving privileges. If such person refuses to submit to such screening test or tests, none may be given, but such refusal is sufficient cause to revoke such person's license or permit to drive in the same manner as provided in section 39-20-04, and a hearing as provided in section 39-20-05 and a judicial review as provided in section 39-20-06 must be available. However, the director must not revoke a person's driving privileges for refusing to submit to a screening test requested under this section if the person provides a sufficient breath, blood, or urine sample for a chemical test requested under section 39-20-01 for the same incident. No provisions of this section may supersede any provisions of chapter 39-20, nor may any provision of chapter 39-20 be construed to supersede this section except as provided herein. For the purposes of this section, "chemical test operator" means a person certified by the state toxicologist as qualified to perform analysis for alcohol in a person's blood, breath, saliva, or urine.

CHAPTER 39-24

REGULATION AND REGISTRATION OF SNOWMOBILES

39-24-09. Rules for operation of snowmobiles.

1. No person may operate a snowmobile upon the roadway, shoulder, or inside bank or slope of any road, street, or highway in this state except as provided pursuant to this chapter. No snowmobile may be operated at any time within the right of way of any interstate highway within this state except as provided in this section.

39-24-11. Penalties.

Any person who violates subsection 12 of section 39-24-09 must be assessed a fee of one hundred dollars. Any person who violates subdivision b or g of subsection 5 of section 39-24-09 is guilty of a class B misdemeanor. Any person who violates subdivision c of subsection 5 of section 39-24-09 is guilty of an infraction or a class B misdemeanor as determined by section 39-24.1-07. Any person who violates subsection 11 of section 39-24-09 is guilty of a class B misdemeanor and must be assessed a fine of at least one hundred dollars. Any person who violates any other provision of section 39-24-09 must be assessed a fee of twenty dollars. Any person, unless specifically exempted, who fails to register or fails to display a decal as required by sections 39-24-02 and 39-24-04 must be assessed a fee of fifty dollars. If the person provides proof of registration after the violation, the fee may be reduced by one-half. Any person who violates any other provision of this chapter for which a specific penalty is not provided must be assessed a fee of ten dollars.

CHAPTER 39-24.1

SNOWMOBILE OPERATOR REGULATION

39-24.1-01. Implied consent to determine alcohol and drug content of blood.

A person who operates a snowmobile on any public land or private land with public access is deemed to have given consent, and shall consent, subject to this chapter, to a chemical test, or tests, of the blood, breath, saliva, or urine for the purpose of determining the alcohol, other drug, or combination thereof, content of the blood. As used in this chapter, the definitions in section 39-24-01 apply, and in addition, "chemical test" means any test or tests to determine the alcohol, or other drug, or combination thereof, content of the blood, breath, saliva, or urine, approved by the state toxicologist under this chapter; and "drug" means any drug or substance or combination of drugs or substances which renders a person incapable of safely operating a snowmobile. The chemical test must be administered at the direction of a law enforcement officer only after placing the person, except persons mentioned in section 39-24.1-04, under arrest and informing that person that the person is or will be charged with the offense of operating a snowmobile while under the influence of intoxicating liquor, drugs, or a combination thereof. For the purposes of this chapter, the taking into custody of a minor under section 27-20-13 satisfies the requirement of an arrest. The law enforcement officer shall also inform the person charged that refusal of the person to submit to the chemical test determined appropriate will result in that person being prohibited from operating a snowmobile for up to three years. The law enforcement officer shall determine the chemical test to be used. When a minor is taken into custody for violating subdivision c of subsection 5 of section 39-24-09, the law enforcement officer shall diligently attempt to contact the minor's parent or legal guardian to explain the cause for the custody and the implied consent chemical testing requirements. Neither the law enforcement officer's efforts to contact, nor any consultation with, a parent or legal guardian may be permitted to interfere with the administration of chemical testing requirements under this chapter.

39-24.1-02. Chemical test of operator in serious bodily injury or fatal accident.

Notwithstanding section 39-24.1-01 or 39-24.1-06, when the operator of a snowmobile is involved in an accident resulting in the death or serious bodily injury, as defined in section 12.1-01-04, of another person, and there is probable cause to believe that the operator is in violation of subdivision c of subsection 5 of section 39-24-09, the operator may be compelled by a law enforcement officer to submit to a chemical test.

39-24.1-03. Persons qualified to administer chemical test and opportunity for additional test.

Only an individual medically qualified to draw blood, acting at the request of a law enforcement officer, may withdraw blood for the purpose of determining the alcohol, drug, or combination thereof, content of the blood. The state toxicologist shall determine

the qualifications or credentials for being medically qualified to draw blood, and shall issue a list of approved designations including medical doctor and registered nurse. This limitation does not apply to the taking of a breath, saliva, or urine specimen. The person tested may have an individual of that person's own choosing, who is medically qualified to draw blood, administer a chemical test in addition to any administered at the direction of a law enforcement officer with all costs of the additional chemical test to be the responsibility of the person charged. The failure or inability to obtain an additional chemical test by a person does not preclude the admission of the chemical test taken at the direction of a law enforcement officer. Upon the request of the person who is tested, a copy of the operational checklist and test record of a breath sample test or analytical report of a blood, urine, or saliva sample test taken at the direction of the law enforcement officer must be made available to that person by the law enforcement agency that administered the chemical test.

39-24.1-04. Consent of person incapable of refusal not withdrawn.

Any person who is dead, unconscious, or otherwise in a condition rendering that person incapable of refusal is deemed not to have withdrawn the consent provided by section 39-24.1-01 and the chemical test may be given.

39-24.1-05. Action following chemical test result for a snowmobile operator.

If a person submits to a chemical test under section 39-24.1-01, 39-24.1-03, or 39-24.1-04 and the test shows that person to have the presence of a drug in that person's body or an alcohol concentration of at least ten one-hundredths of one percent by weight at the time of the performance of the test within two hours after the operating of a snowmobile, the test is evidence of a per se violation of subdivision c of subsection 5 of section 39-24-09.

39-24.1-06. Revocation of privilege to operate snowmobile upon refusal to submit to testing.

1. If a person refuses to submit to testing under section 39-24.1-01, no chemical test may be given, but the law enforcement officer immediately shall issue to that person a summons or otherwise notify that person in writing to appear at the time and place specified in the summons or notice. The hearing and any appeal must be conducted as provided in section 39-06.1-03. If the person requests a hearing at a time and date other than as stated in the summons or notice, that person must post an appearance bond as required by subsection 2 of section 39-06.1-03. Upon establishing at the hearing by a preponderance of the evidence that the officer had probable cause to believe the person had been operating a snowmobile while in violation of subdivision c of subsection 5 of section 39-24-09 or had observed that the snowmobile was operated in a negligent, reckless, or hazardous manner as defined by the director by rule, that the person was lawfully arrested if applicable, and that the person had refused to submit to the chemical test under section 39-24.1-01, the court shall prohibit the person from operating a snowmobile on all public land or private land with public access for the

appropriate period under this section, and shall impose a noncriminal statutory fee of five hundred dollars. A violation of this section must be reported to the parks and recreation department. The department shall keep a record of all reported violations. The period for which a person is prohibited from operating a snowmobile under this section is:
a. One year if the person's record shows that within the five years preceding the most recent refusal under this section, the person has not been prohibited from operating a snowmobile for a violation of this chapter or for a violation of subdivision c of subsection 5 of section 39-24-09.
b. Two years if the person's record shows that within the five years preceding the most recent refusal under this section, the person has once been prohibited from operating a snowmobile for a violation of this chapter or for a violation of subdivision c of subsection 5 of section 39-24-09.
c. Three years if the person's record shows that within the five years preceding the most recent refusal under this section, the person has twice been prohibited from operating a snowmobile under this chapter or for a violation of subdivision c of subsection 5 of section 39-24-09 and the prohibitions resulted from at least two separate arrests.
2. A person may not be prohibited from operating a snowmobile under this section if:
a. The person files an affidavit with the court before the time set for hearing in the summons or notice, or, with the permission of the court, within five days after the hearing. The affidavit must state that the person:
(1) Intends to voluntarily plead guilty to violating subdivision c of subsection 5 of section 39-24-09 within thirty days after the date of the offense;
(2) Agrees that the person may not operate a snowmobile for the appropriate period defined in section 39-24.1-07;
(3) Acknowledges the right to a section 39-06.1-03 administrative hearing and section 39-06.1-03 judicial review and voluntarily and knowingly waives these rights; and
(4) Agrees that the person may not operate a snowmobile for the appropriate period as provided under this section without an administrative hearing or judicial review, if the person does not plead guilty within thirty days after the date of the offense, or the court does not accept the guilty plea, or the guilty plea is withdrawn; and
b. The person pleads guilty to violating subdivision c of subsection 5 of section 39-24-09 within thirty days after the date of the offense.

39-24.1-07. Criminal penalties for operating snowmobile while having alcohol or drug concentrations.

Upon conviction of a violation of subdivision c of subsection 5 of section 39-24-09, the court shall impose the following minimum penalties:

1. Notwithstanding subsection 7 of section 12.1-32-01, if the person's record indicates that, within the five years preceding the date of the offense, the person has not violated subdivision c of subsection 5 of section 39-24-09 or the person has not been prohibited from operating a snowmobile under this chapter, the offense is an infraction. The court shall impose a minimum fine of two hundred fifty dollars and, as a condition of that person's probation, shall prohibit that person from operating a snowmobile on all public

land or private land with public access for sixty days within the snowmobile season that runs from December first through April first.
2. Notwithstanding subsection 7 of section 12.1-32-01, if the person's record indicates that, within the five years preceding the date of the offense, the person has one violation of subdivision c of subsection 5 of section 39-24-09 or the person has once been prohibited from operating a snowmobile under this chapter, the offense is an infraction. The court shall impose a minimum fine of three hundred fifty dollars and, as a condition of that person's probation, shall prohibit that person from operating a snowmobile on all public land or private land with public access for one year from the date of the sentence.
3. If the person's record indicates that, within the five years preceding the date of the offense, the person has two violations of subdivision c of subsection 5 of section 39-24-09 or the person has twice been prohibited from operating a snowmobile under this chapter, the offense is a class B misdemeanor. The court shall impose a minimum fine of four hundred fifty dollars and, as a condition of that person's probation, shall prohibit that person from operating a snowmobile on all public land or private land with public access for two years from the date of the sentence.

39-24.1-08. Interpretation of chemical tests.

Upon the trial of any action or proceeding arising out of acts alleged to have been committed by any person while operating a snowmobile while under the influence of intoxicating liquor, drugs, or a combination thereof, evidence of the amount of alcohol, drugs, or a combination thereof in the person's blood at the time of the act alleged as shown by a chemical analysis of the blood, breath, saliva, or urine is admissible. For the purpose of this section:

1. A person having a drug in that person's body or an alcohol concentration of at least ten one-hundredths of one percent by weight at the time of the performance of a chemical test within two hours after operating a snowmobile is under the influence of intoxicating liquor, drugs, or a combination thereof at the time of operating a snowmobile.
2. Alcohol concentration is based upon grams of alcohol per one hundred cubic centimeters of blood or grams of alcohol per two hundred ten liters of alveolar air or grams of alcohol per sixty-seven cubic centimeters of urine.
3. The results of the chemical test must be received in evidence when it is shown that the sample was properly obtained and the test was fairly administered, and if the test is shown to have been performed according to methods and with devices approved by the state toxicologist, and by an individual possessing a certificate of qualification to administer the test issued by the state toxicologist. The state toxicologist is authorized to approve satisfactory devices and methods of chemical tests and determine the qualifications of individuals to conduct such tests, and shall issue a certificate to every qualified operator. An operator shall exhibit the certificate upon demand of the person requested to take the chemical test.
4. The state toxicologist may appoint, train, certify, and supervise field inspectors of breath testing equipment and its operation, and the inspectors shall report the findings of any inspection to the state toxicologist for appropriate action. Upon approval of the

methods or devices, or both, required to perform the tests and the persons qualified to administer them, the state toxicologist shall prepare and file written record of the approval with the director and the recorder in each county, unless the board of county commissioners designates a different official, and shall include in the record:
a. An annual register of the specific testing devices currently approved, including serial number, location, and the date and results of last inspection.
b. An annual register of currently qualified and certified operators of the devices, stating the date of certification and its expiration.
c. The operational checklist and forms prescribing the methods currently approved by the state toxicologist in using the devices during the administration of the tests.
The material filed under this subsection may be supplemented when the state toxicologist determines it to be necessary, and any supplemental material has the same force and effect as the material that it supplements.
5. Copies of the records referred to in subsections 3 and 4, certified by the recorder, or designated official, must be admitted as prima facie evidence of the matters stated in the records.
6. A certified copy of the analytical report of a blood, urine, or saliva test issued by the state toxicologist must be accepted as prima facie evidence of the results of a chemical test performed under this chapter.
7. Notwithstanding any statute or rule to the contrary, the defendant in any criminal proceeding may subpoena, without cost to the defendant, the person who conducted the chemical test referred to in this section to testify at the trial on the issue of the amount of alcohol, drugs, or a combination thereof in the defendant's blood, breath, saliva, or urine at the time of the alleged act.
8. A signed statement from the individual medically qualified to draw the blood sample for testing as set forth in subsection 3 is prima facie evidence that the blood sample was properly drawn and no further foundation for the admission of this evidence may be required.

39-24.1-09. Proof of refusal admissible in any action or proceeding.

If the person under arrest refuses to submit to the chemical test, proof of refusal is admissible in any action or proceeding arising out of acts alleged to have been committed while the person was operating a snowmobile while under the influence of intoxicating liquor, drugs, or a combination thereof.

39-24.1-10. Effect of evidence of chemical test.

This chapter does not limit the introduction of any other competent evidence bearing on the question of whether the person was under the influence of intoxicating liquor, drugs, or a combination thereof, but, if the chemical test results show a drug or an alcohol concentration of at least ten one-hundredths of one percent, the purpose of the evidence must be limited to the issues of probable cause, whether an arrest was made prior to the administering of the test, and the validity of the test results.

39-24.1-11. Liability.

Any individual medically qualified to draw blood or any licensed physician, nurse, technician, or an employee of a hospital who draws blood from any person pursuant to a request of any arresting officer is not liable in any civil action for damages arising out of the act except for gross negligence.

39-24.1-12. Operation of snowmobile during period of prohibition - Penalty.

Any person who operates a snowmobile on any public land or private land with public access during the period the person is prohibited from operating a snowmobile under this chapter is guilty of a class A misdemeanor.

39-24.1-13. Fleeing or attempting to elude a peace officer.

1. Any driver of a snowmobile who willfully fails or refuses to bring the snowmobile to a stop, or who otherwise flees or attempts to elude, in any manner, a pursuing police vehicle or peace officer, when given a visual or audible signal to bring the snowmobile to a stop, is guilty of a class B misdemeanor for a first or second offense and a class A misdemeanor for a subsequent offense. A signal complies with this section if the signal is perceptible to the driver and:
a. If given from a vehicle, the signal is given by hand, voice, emergency light, or siren, and the stopping vehicle is appropriately marked showing it to be an official police vehicle; or
b. If not given from a vehicle, the signal is given by hand, voice, emergency light, or siren, and the officer is in uniform and prominently displays the officer's badge of office.
2. Any sentence imposed under this section must include a minimum fine of at least five hundred dollars.

DUI PENALTIES

PURSUANT TO 39-08-01 NORTH DAKOTA CENTURY CODE (NDCC)

First Time Offender:
1. A fine of at least $250
2. A 91 day license suspension, if BAC is between 0.08 and 0.17
3. A 180-day license suspension, if BAC is 0.18 or greater
4. A mandatory referral to addiction facility for evaluation

Second Time Offender (Within Five Years):
5. Fine of at least $500
6. Five days imprisonment (of which 48 hours must be served consecutively) or thirty days community service work
7. A license suspension of 365 day, if BAC is between 0.08 and 0.17
8. A license suspension of two year, if BAC is 0.18 or greater

9. A mandatory referral to addiction facility for evaluation

Third Time Offender (Within Five Years):
10. A fine of at least $1000
11. Sixty days imprisonment (of which 48 hours must be served consecutively)
12. A license suspension of two years, if BAC is between 0.08 and 0.17
13. A license suspension of three years, if BAC is between 0.18 or greater
14. A mandatory referral to addiction facility for evaluation

Fourth Time Offender (Within Seven Years):
15. A fine of at least $1000
16. One hundred eighty days imprisonment (of which 48 hours must be served consecutively)
17. Driving privileges may only be restored only after the offender has completed an addiction treatment program and has not committed any alcohol-related offenses of any kind for at least two consecutive years following treatment.

THE ABOVE PENALTY LEVELS DO NOT PREVENT A COURT FROM IMPOSING THE MAXIMUM SENTENCE ALLOWED BY LAW: First or second offense, 30 days imprisonment and a fine of $500; third or subsequent offense, 1 year imprisonment.

Sentences are mandatory and cannot be suspended nor deferred. The mandatory fine and imprisonment apply only to DUI conviction, not actual physical control. The period of revocation for refusing to take a chemical or onsite screening test is from one to three years. A temporary restricted license (work permit) can only be issued to first time offenders after serving 30 days of the suspension period. No temporary restricted license can be given to those who refuse to take a chemical or onsite screening test or who are repeat DUI or actual physical control offenders.

LABORATORY

The following experiments are designed to help understand situations that may arise at the various Intoxilyzer 5000 locations. Remember to read the entire lab test before beginning that test sequence; and if you have any questions as to how to conduct the test, ask for clarifications. Upon completion of the following tests, you are expected to perform additional tests with known test solutions to complete a minimum of 30 tests. All the tests should be recorded in you lab notebook and reviewed, as you complete them, by the chemist in charge of the lab.

NORTH DAKOTA CUSTOM MODE SEQUENCE (CMS)

1. Press “Esc,” “Esc” (in one second), followed by “Start Test” switch.

2. This is the setting used for all DUI, MZT, HUI, BUI, and APC subject tests in the field.

3. You may reuse the mouthpieces while training in this class. However, when you conduct tests in the field, please follow the “Approved Method.”

4. This mode must be followed for the following: DUI, APC, MZT, BUI, and HUI.

CHECK CALIBRATION (ACA MODE)

1. Press “Esc,” “Esc” (in one second), then “Enter,” “Enter.”
   The Menu “1 B, C, P, Q” will be displayed.
   Press “C” for a calibration check, then “Enter.”

2. **Note**: The operator must check to see if the simulator solution is up to temperature.

TESTS ONLY REQUIRING ONE BREATH TEST (ABA MODE)

1. Press “Esc,” “Esc” (in one second), then “Enter,” “Enter.”
   The Menu “1 B, C, P, Q” will be displayed.
   Press “B” for Breath, then “Enter.”

2. **Note**: This may be used for MIC, public intoxication, work release, and general court orders when the “Approved Method to Conduct Breath Tests” is not required.

DEFINITIONS

1. ST (Subject Test). Blown into Intoxilyzer by the operator.

2. CS (Calibration Check With Standard Solution). 0.11 AC standard solution.

3. Adequate Sample. Blow through the simulator long and hard until the zero appears to the left of the decimal on the display screen.

4. Deficient Sample. Blow through the simulator hard enough to start the tone and then quit blowing.

INSTRUCTIONS FOR LAB TESTS

1. Run the tests as described in the following pages.

2. For these tests, indicate you have "ascertained a 20 minute deprivation period."

3. Start the Appropriate Mode.

4. Enter "subjects last name" through the "operator's no." when requested on the display.

5. Enter the **four digit** simulator solution temperature when requested.

6. Record the information on the Form 120-I while the test is running.

7. Record the relevant information in your record book.

8. Make sure the test record is completed according to the instructions.

9. Hand in the last (hard) copy (or one printed copy) of the test record to the instructor in charge of the lab.

Note: The subject's last name is underlined at the top of each page. Each officer must complete all of the following tests prior to certification.

Location Code Listing:

BELC	BIA-Belcourt; Belcourt, ND
BOTT	Bottineau Co SO; Bottineau, ND
BOWM	Bowman PD; Bowman, ND
BSPD	Bismarck PD; Bismarck, ND
CAND	Towner Co SO; Cando, ND
CASS	Cass Co SO; Fargo, ND
CAVA	Pembina Co SO; Cavalier, ND
COOP	Griggs Co SO; Cooperstown, ND
CROS	Divide Co SO; Crosby, ND
DEVL	NDHP; Devils Lake, ND
DKPD	Dickinson PD; Dickinson, ND
FORM	Sargent Co SO; Forman, ND
FRGO	Fargo PD; Fargo, ND
FTOT	BIA-Fort Totten; Fort Totten, ND
FYPD	Fort Yates PD; Fort Yates, ND
GFAF	Grand Forks AFB; Grand Forks, ND
GFPD	Grand Forks PD; Grand Forks, ND
GFSO	Grand Forks Co SO; Grand Forks, ND
GRAF	Walsh Co SO; Grafton, ND
HARV	Harvey PD; Harvey, ND
HETT	Adams Co SO; Hettinger, ND
HILL	Hillsboro PD; Hillsboro, ND
JAME	Jamestown PD; Jamestown, ND
KILL	Killdeer PD; Killdeer, ND
LAMO	LaMoure Co SO; LaMoure, ND
LANG	Cavalier Co SO; Langdon, ND
LARI	Larimore PD; Larimore, ND
LISB	Ransom Co SO; Lisbon, ND
MAND	Mandan PD; Mandan, ND
MNAF	Minot AFB; Minot, ND
MOHL	Renville Co SO; Mohall, ND
NEWT	BIA-New Town; New Town, ND
OAKS	Oakes PD; Oakes, ND
ROLL	Rolette Co SO; Rolla, ND
RUGB	Pierce Co SO; Rugby, ND
STAN	Mountrail Co SO; Stanley, ND
STAT	Mercer Co SO; Stanton, ND
STEE	Kidder Co SO; Steele, ND
TOXL	Office of Attorney General; Tox Lab
UNDP	UND PD; Grand Forks, ND
VALL	Valley City PD; Valley City, ND
WAHP	Richland Co SO; Wahpeton, ND
WARD	Ward Co SO; Minot, ND
WASH	McLean Co SO; Washburn, ND
WATF	McKenzie Co SO; Watford City, ND
WFPD	West Fargo PD; West Fargo, ND
WILL	Williston LEC; Williston, ND

County Codes Listing:

COUNTY CODES

01	Adams	28	McLean
02	Barnes	29	Mercer
03	Benson	30	Morton
04	Billings	31	Mountrail
05	Bottineau	32	Nelson
06	Bowman	33	Oliver
07	Burke	34	Pembina
08	Burleigh	35	Pierce
09	Cass	36	Ramsey
10	Cavalier	37	Ransom
11	Dickey	38	Renville
12	Divide	39	Richland
13	Dunn	40	Rolette
14	Eddy	41	Sargent
15	Emmons	42	Sheridan
16	Foster	43	Sioux
17	Golden Valley	44	Slope
18	Grand Forks	45	Stark
19	Grant	46	Steele
20	Griggs	47	Stutsman
21	Hettinger	48	Towner
22	Kidder	49	Traill
23	LaMoure	50	Walsh
24	Logan	51	Ward
25	McHenry	52	Wells
26	McIntosh	53	Williams
27	McKenzie		

Composition Notebook (Completed Example):

Your notebook should always be kept up to date. It is your own personal record of the tests you have run. Please make the appropriate changes in your own notebook so that it conforms with the example shown below.

INTOXILYZER TESTS

No.	Date	Arresting Officer's Name	Subject's Name	Test #1	Std. Test	Test #2
1	9/27/03	Peterson, Bob	Doe, John	0.161	0.109	0.159
2	9/29/03	Olson, Rick	Doe, Jane	0.210	0.107	0.214
3	9/30/03	NA	ACA	0.110	0.111	0.114
4	9/30/03	Peterson, Bob	Person, Junior	0.057	MIC	-----
5	9/30/03	Peterson, Bob	Johnson, Tom	0.297	0.112	Ref

INDIVIDUAL TESTS

Subject's Last Name (ACA Test):

Note: The operator must make sure the simulator is up to temperature prior to starting this test.

Mode: ACA

1. Press "Esc," "Esc," followed by "Enter," "Enter."
   When "1 B, C, P, Q" displayed, press "C" followed by "Enter."

2. Enter the requested information.

3. Run the test sequence.

4. The Form 120-I should be completed during the test.

5. Sign the test record after it is printed.

This test "checks the calibration" of the Intoxilyzer 5000.

It must be done at least every 45 days, preferably once a month, or when two sheets of the form 120-I are completed (50 subject tests).

Subject's Last Name (Test A):

The operator should act as the subject - Adequate ST 1 and ST 2

Mode: ND Custom Mode Sequence

1. ST 1 – Blow an adequate sample into the breath tube.
2. CS – Read and record the simulator solution temperature
3. ST 2 - Repeat ST 1

This allows the operator to understand for a good breath sample.

Subject's Last Name (Test B):

The operator should act as the subject - Adequate ST 1 and ST 2

Mode: ND Custom Mode Sequence

1. ST 1 – Blow through a simulator into the breath tube to provide an adequate sample.

2. CS – Read and record the simulator solution temperature.

3. ST 2 - Repeat ST 1

This allows the operator to observe and record data from a valid subject test.

Subject's Last Name (Test C):

Deficient Sample for ST 2

Mode: ND Custom Mode Sequence

1. ST 1 - Blow an adequate test solution into the breath tube.

2. CS – Read and record the simulator solution temperature.

3. ST 2 - Blow a deficient sample of test solution into the breath tube.

This demonstrates a test when the subject gives up or cannot blow a second sample.

Subject's Last Name (Test D):

Sample Introduced at Wrong Time

Mode: ND Custom Mode Sequence

1. ST 1 - Blow an adequate test solution into the breath tube.

2. CS – Read and record the simulator solution temperature.

3. ST 2 – Immediately (after the air blank when the dots are moving across screen) blow test solution into the breath tube.

This test demonstrates the test results when the operator coaches the subject to blow too early or the subject starts blowing too early. Notice that a second room air sample is analyzed and the test is labeled "INVALID TEST SAMPLE INTRODUCED AT IMPROPER TIME."

Subject's Last Name (Test E):

No Second Subject Test

Mode: ND Custom Mode Sequence

1. ST 1 - Blow adequate test solution into the breath tube.

2. CS – Read and record the simulator solution temperature.

3. ST 2 - **Do not blow** a sample. Wait until the test record is automatically printed.

This simulates a subject refusing a second test. This is a valid test and the first subject test will be the recorded alcohol concentration and time. The operator must offer the second sample and allow the time to run out.

Note: The designation for Deficient Sample on the Test Record.

Subject's Last Name (Test F):

Double Refusal

Mode: ND Custom Mode Sequence

1. ST 1 – **Do not blow a sample**. Wait.

2. CS – Read and record the simulator solution temperature.

3. ST 2 – **Do not blow a sample**. Wait.

This simulates a subject refusing the breath test. This indicates the operator allowed the subject to try twice, for "three minutes" each time.

Subject's Last Name (Test G):

Blow acetone simulator into the Intoxilyzer 5000

Mode: ND Custom Mode Sequence

1. ST 1 - Blow sample of acetone into the breath tube.

2. Stop the test by depressing the "Start Test" button. Keep the test record copies as evidence.

STOP TEST—GET MEDICAL ATTENTION

This simulates what a diabetic in ketosis may display. You should get medical attention for this subject. Physical actions of the subject may be similar to those of an inebriated person. Follow your agency policy manual concerning medical attention.

Note: Write "Subject Was Taken for Medical Attention" on the Test Record and get a blood or urine specimen as evidence for the DUI.

.

Subject's Last Name (Test H):

Simulator label: Ethanol and Acetone or 0.10 AC plus Acetone

Mode: ND Custom Mode Sequence

1. ST 1 - Blow an adequate sample of 0.10AC EtOH and acetone.

2. Stop the test by depressing the "Start Test" button. Keep the test record copies as evidence.

STOP TEST—GET MEDICAL ATTENTION

This simulates what a diabetic with a 0.10 AC in ketosis would display. You should get medical attention for this subject. Physical actions of the subject may be more exaggerated than those of a person having a 0.10 breath alcohol concentration. Follow your agency policy manual concerning medical attention.

Note: Write "Subject Was Taken for Medical Attention" on the test record and get a blood or urine specimen as evidence for the DUI.

Note: The Intoxilyzer 5000 subtracts the acetone and reports the actual alcohol concentration.

Subject's Last Name (Test I):

Simulator label: Methanol

Mode: ND Custom Mode Sequence

1. ST 1 - Blow an adequate sample of 0.10 percent MeOH (methanol).

2. Stop the test by depressing the "Start Test" button. Keep the test record copies as evidence.

STOP TEST—GET MEDICAL ATTENTION

This simulates what a 0.10 percent methanol would display, "INTERFERENT DETECTED." You should get medical attention for this subject. Physical actions of the subject may be more exaggerated than those of a person having a 0.10 breath ethyl alcohol concentration. Follow your agency policy manual concerning medical attention.

Note: Write "Subject Was Taken for Medical Attention" on the test record and get a blood or urine specimen as evidence for the DUI.

Subject's Last Name (Test J):

Simulator labeled: Onion and Garlic

Mode: ND Custom Mode Sequence

1. ST 1 - Blow an adequate sample of onion and garlic.

2. CS – Read and record the simulator solution temperature.

3. ST 2 - Repeat ST 1.

This simulates what a breath with onion and garlic (e.g. from pizza or spaghetti) would display. There should be no interference with the breath test.

Subject's Last Name (Test K):

Simulator labeled: MIC (Minor in Consumption)

Mode: ABA

1. ST 1 - Blow an adequate sample from the simulator labeled MIC.

This simulates a test run on a person consuming alcohol under the legal age.

Note: An S-D2 test will suffice in most jurisdictions. Check with your local policies to see what is required. There is no Implied Consent with MIC cases. The subject may refuse. No Report and Notice will be filed.

Subject's Last Name (Test L):

Breath Freshener

Mode: ND Custom Mode Sequence

1. ST 1 – Spray mouth with breath freshener. Wait two to three minutes. Blow an adequate sample.

2. Stop the test by depressing the "Start Test" button. Keep the test record copies as evidence.

Note: The high-low tone indicates an error. "INVALID SAMPLE XXX" in the first breath indicates the 20 minute deprivation period has been voided. Wait 20 minutes before starting a new test or get a blood or urine specimen as evidence for the DUI.

Subject's Last Name (Print Test):

Mode: P

1. Press "ESC" "ESC" followed by "Enter" "Enter".
   When "1 B, C, P, Q" is displayed press "P" followed by Enter.

2. Follow the display instructions.

3. Sign the test record after it is printed.

This test checks the printer and setup of the Intoxilyzer 5000.